RIVETT

MACHINE TOOLS

RIVETT LATHE & GRINDER, INC.

BRIGHTON 35, BOSTON, MASSACHUSETTS

INSTALLATION INSTRUCTIONS FOR 608-PC SCREW CUTTING LATHE
Mounted on Bench or Oak Cabinet

Item 1 - Receiving and Unpacking

If any damage is noticed to packaging of machine or parts, call representative of delivering carrier to inspect condition before removing crate or taking parts from boxes and enter claim against the transportation company. The shipper holds receipt in good order for the entire consignment.

Carefully unpack, using nail puller for removing crate, box covers and braces. Avoid jarring machine or machine parts when doing this. Leave the mounting on the skid on which it was shipped until machine has been finally located. Check all items against packing list. If any shortage exists, re-examine packing material before discarding. Small pieces may be lost unless all excelsior and wrapping paper is thoroughly overhauled.

Remove slushing grease using fresh cotton waste or cloth and gasoline or kerosene. Immediately go over all polished and scraped surfaces with an oiled rag.

Item 2 - Setting Up

Locate cabinet or bench and level top in both directions, lengthwise and crosswise. Insert strips of 1/4" cork or other insulating material between bench or cabinet and floor and fasten with lag screws or bolts - see floor plan, print #

To Install Lathe - Screw the two jack pedestal bolts into the bottom face of the lathe bed. Place the spherical washer found on one of the pedestal bolts in the spherical depression on the top surface of the tailstock jack pedestal already in position on the bench top. Lift the lathe on to the jack pedestals and with the flat washers in place apply and tighten the pedestal bolt nuts. These nuts need not and should not be made up too tight. The spherical washer on the tailstock jack pedestal and two steel balls between the lathe bed and the headstock jack pedestal provide a three point mounting of the lathe and insure against any distortion.

To Install Driving Belt - Remove the tie block in the "U" shaped belt guard on bench or cabinet top and pass lower loop of endless belt down through the resulting slot. Place upper loop of endless belt on smallest step of headstock cone pulley and pull tight so lower loop will engage the driving cone pulley on the speed box. Replace the tie block in the "U" shaped belt guard.

To Tension Driving Belt and Level Bed - Jack pedestals on which lathe bed rests provide height adjustment for tensioning underneath driving belt and leveling bed. Loosen the pedestal bolt nuts under

the bench top. Insert a short piece of 1/4" or 5/16" round stock in the holes of the upper collars and turn left handed to raise the bed and to increase the belt tension. When subsequently raising bed to tighten belt be sure to turn the headstock and tailstock jack screws the same number of holes to keep the bed level. Tighten pedestal bolt nuts and set screws in pedestal bases after adjustment is completed.

Item 3 -- Assembling Machine

A) Installing Quick Change Gear Box

Attach the quick change gear box to the left end of the bed after first removing the two binder bolts from bed. Locate the gear box by engaging the two driving pins on the end of the lathe feed rod with the corresponding holes in the cone gear shaft. Fasten the gear box to end of lathe bed with hex binder bolt through radial slot in rear and tee binder bolt through radial slot at bottom. Bring round nut on tee binder bolt finger tight and screw in binder handle used for locking gear box in position after swinging to engage proper stud gear. See Quick /Change Gear Box, print 608-20 and Bed, print 608-23.

B) Installing Compound Slide Rest

Carefully wipe and oil contacting slide surfaces. Place slide rest on top of carriage angle with clamping tee bolt engaged in tee slot of slide rest base. Slide rest can be held in any position on carriage angle by clamping bolt operated by the binder handle at right. If power cross feed is used, the guard slide in front end of carriage angle is rotated to the right exposing the driven gear. Mount slide rest almost flush with the front of the carriage angle so as to permit driving gear to be swung upward by small handle at front right side of carriage angle to mesh with slide rest gear under front end of slide rest base.

Item 4 - Lubrication

The headstock spindle bearings are equipped with wick feed oil cups and should be kept filled. Other lubrication points on lathe are equipped with small spring oilers, or oil holes marked "OIL". They should receive several drops of oil once or twice a day or shift. Use a high grade machine oil for all lubrication. An oil film should be maintained on all slides and finished surfaces to prevent rust.

Item 5 -- 608-PC Headstock

(Numbers in text refer to print 608-5C-12)

The back gears are thrown in and out of mesh by ball handle #36 on the left end of eccentric shaft. A knurled-head pin #62 in the web of the gear inside left end of headstock sheave is pulled out to disconnect gear from sheave when using back gears and is pushed in to engage hole in sheave web when using open belt.

To Adjust Spindle - To adjust the rear spindle bearing #13 remove draw-in spindle #7. Remove spindle gear #9 after loosening set screw #49, being careful not to lose ball #47 and spring #48. With small screw driver turn slotted head screw at the bottom of the bearing. Turning this screw right handed compresses the split bearing and compensates for wear. To adjust the front spindle bearing #23 loosen the round slotted head screw #15 inside the web of the large spindle gear at the left of the headstock pulley and with a screw driver or other flat tool engage the slot in the adjusting nut #16. Turning this nut right-handed draws the spindle into the tapered front bearing. The front bearing should be snug without being tight. Always adjust the spindle at normal operating tamperature. After adjusting the front spindle bearing, tighten locking screw #15 to hold the setting.

To Replace Headstock Belt - Remove the tie block in the "U" shaped belt guard on cabinet top. Loosen lever screw #27 and remove gear shaft lever #36. Loosen the two set screws #37 holding the back gear shaft bearing. Insert flat tool in slots provided on underside of bearings and pry bearings from their mounting. Remove shaft #33 and back gear #32. Slip belt off the driving pulley and pull the lower loop through the "U" opening in cabinet top. Replace with new belt and reverse the sequence of operations to reassemble.

Item 10-C - The Speed Box Motor Drive

The constant speed motor is controlled by drum type reversing switch. While lathe is in use the motor should run continuously. Correct spindle speeds are obtained through engagement or disengagement of back gears and position on flat driving belt in cone pulleys and selective high or low in speed box.

Twelve spindle speeds are available, six with back gears engaged and six with open belt (back gears disengaged). Speed box provides selective high and low spindle speeds in 3 to 1 ratio.

After setting back gears and flat driving belt for desired spindle speeds, the lathe should be operated entirely by speed box control lever, mounted on the cabinet directly in front of the headstock. With the control lever in center position the speed box clutch is in neutral and power from the motor is not transmitted to the cone driving pulley. Also, in this position, an automatic brake applies to the inner rim of the cone driving pulley. With the control lever in the right indented position the speed box transmits its high speed to the driving pulley and in left indented position its low speed. Brake automatically disengages when control lever is in either operating positions. To reverse the spindle, reverse the motor drum type switch.

INSTRUCTIONS FOR 608-PV SCREW CUTTING LATHE
MOUNTED ON KNEE-HOLE CABINET

Item 1 - Receiving and Unpacking

If any damage is noticed to packaging of machine or parts, call representative of delivering carrier to inspect condition before removing crate or taking parts from boxes and enter claim against the transportation company. The shipper holds receipt in good order for the entire consignment.

Carefully unpack, lsing nail puller for removing crate, box covers and braces. Avoid jarring machine or machine parts when doing this. Leave the lathe with mounting on the skid on which it was shipped until machine has been finally located. Check all items against packing list. If any shortage exists, re-examine packing material before discarding. Small pieces may easily be lost unless all excelsior and wrapping paper is thoroughly overhauled.

Remove slushing grease using fresh cotton waste or cloth and gasoline or kerosene. Immediately go over all polished and scraped surfaces with an oiled rag.

Item 2 - Setting Up

Machine should be moved close to its location on its skid, lag screws then removed and machine placed carefully on its prepared position in accordance with floor plan, print # in this manual. Fasten to flooring with four 1/2" lag screws or bolts. Level machine lsing precision level lengthwise and crosswise in lathe bedways.

Item 3 - Assembling Machine

A) Installing Quick Change Gear Box

Attach the quick change gear box to the left end of the bed after first removing the two binder bolts from bed. Locate the gear box by engaging the two driving pins on the end of the lathe feed rod with the corresponding holes in the cone gear shaft. Fasten the gear box to end of lathe bed with hex binder bolt through radial slot in rear and tee binder bolt finger tight and screw in binder handle used for locking gear box in position after swinging to engage .roper stud gear. See Quick Change Gear Box, print 608-20 and Bed, print 608-23, a part of this manual.

B) Installing Compound Slide Rest

Carefully wipe and oil contacting slide surfaces. Place slide ret on top of carriage angle with clamping tee bolt engaged in tee slot of slide rest base. Slide rest can be held in any position on carriage angle by clamping bolt operated by the binder handle at right. If power cross feed is used, the guard slide in front end of carriage angle is rotated to the

right exposing the driver gear. Mount slide rest almost flush with the front of the carriage angle so as to permit driving gear to be swung upward by small handle at front right side of carriage angle to mesh with slide rest gear under front end of slide rest base.

Item 4 - Lubrication

The headstock spindle bearings are equipped with wick feed oil cups and should be kept well filled. Other lubrication points on lathe are equipped with small spring oilers, or oil holes marked "OIL". They should receive several drops of oil once or twice a day or shift. Use a high grade machine oil for ALL lubrication. An oil film should be maintained on all slides and finished surfaces to prevent rust.

Item 5 - Headstock
(Numbers refer to print 608-5C-12A)

The back gears are thrown in and out of mesh by ball handle #62 on the left end of eccentric shaft. A knurled-head pin #50 in the web of the gear inside left end of headstock sheave is pulled out to disconnect gear from sheave when using back gears and is pushed in to engage hole in sheave web when using open belt.

To Adjust Spindle - to adjust the rear spindle bearing #10 remove draw-in spindle #5. Remove spindle gear #7 after loosening set screw #38, being careful not to lose ball #36 and spring #37. With small screw driver turn the slotted head screw at the bottom of the bearing. Turning this screw right handed compresses the split bearing and compensates for wear. To adjust the front spindle bearing #34 loosen the round slotted head screw #14 inside the web of the large spindle gear at the left of the headstock sheave with a screw driver or other flat tool engage the slot in the adjusting nut #15. Turning this nut right handed draws the spindle into the tapered front bearing. The front bearing should be snug without being tight. Always adjust the spindle at normal operating temperature. After adjusting the front spindle bearing, tighten the locking screw #14 to hold the setting.

To Replace Headstock Belt - remove the belt and back gear guards. Remove the tie block in the "U" opening in cabinet top. Loosen lever screws #27 and remove gear shaft lever #62. Loosen the two screws #64 holding the back gear shaft bearings. Insert flat tool in slots provided on underside of bearings and pry bearings from their mounting. Remove shaft #33 and back gear #32. Slip the velt belt off the driving sheave and pull the lower loop through the "U" opening in cabinet top. Replace with new vee belt and reverse the sequence of operations to reassemble.

Item 6 - Quick Change Gear Box
(Numbers in text refer to print 608-20)

The driving gear is keyed to the spindle at the rear of the rear headstock bearing and drives the quick change gear box through switch and stud gears. By knurled knob this driving gear can be moved along spindle to three detented positions. In right detented position the driving gear engages the switch gear through intermediate gear which through quick change gear box moves the lathe carriage to the right. In center detented position the driving gear is out of mesh and all speed gearing is stopped. In left detented position the driving gear directly engages the switch gear, which through quick change gear box moves carriage to left.

The driving stud, driven by the switch gears is permanently fitted with 18 and 30 tooth gears #66 and #67. The upper gear box shaft carries a sliding compound gear #48 with 60 and 72 teeth. This gives two selective ratios, one to four and one to two from the driving stud. Compound gearing, as tabulated in print GT-12 of this manual, drives from the upper gear box shaft to the sliding tumbler gear shaft. For Standard thread pitches ten to one hundred and forty-four per inch 70 on to 70 and 28 on to 112 compound gears are used. For thread pitches less than ten per inch special gears, 4 to 1 ratio (80-20) are lsed. This set up requires an idler connecting gear mouned on a stud on the quadrant. The gear box provides fou r groups of seven thread pitches. Each group is controlled by positioning the compound gear #48 on the upper shaft and the sliding compound gears #1 and #2 on the tumbler shaft. Two additional thread pitches, 30 and 120 are obtained by swinging the gear box as to mesh the 60 tooth gear of the sliding compound #48 on the upper shaft, with the 18 tooth stud gear #66. The thread pitches within each group are controlled by the setting of the index lever. A plate on the front of gear box indicates the location of the lever for each pitch of thread.

By mounting pick-off gear on the auxiliary quadrant provided, additional threads may be cut, see print GT-12 of this manual. Pick-off gears for 11-1/2, 15 and 27 pitch threads are included with standard lathe equipment. When pick-off gears are used, the index lever must be out of engagement.

Item 7 - Carriage
(Numbers in text refer to print 608-26)

Longitudinal travel is available through ball handle (#47) rack and pinion. Power feed l s from the feed rod and is obtained by pulling outward and cloping lever #21 on the left end of the carriage until the spring latch moves up and supports the lever in its full "OUT" position. This engages a friction clutch and establishes gear connection from the feed rod to the feed rack on the front underside of the bed. Feed ls thrown out automatically by the carriage stop clamped at any desired position on the lower dovetail on the front face of the bed. The conical point of the stop screw eccentrically

contacts a hole in the spring latch and forces it downward releasing the sloping friction lever.

When cutting threads from the lead screw, the gear train for the power feed may be disconnected by pulling out the knurled round knob (#20), at the lower left front of the carriage. This saves wear on the gears and eliminates their drag which is conductive to higher precision of thread cutting.

To engage the lead screw and nut for thread cutting the eccentric ball handle lever #63 at the extreme right end of the apron is swung upward to a vertical position. The carriage is fitted with safety interlock #31, print #608-26A, to prevent simultaneous engagement of the lead screw and p ower feed. With the operating lever moved to the left head screw nut may be engaged and with the operating lever moved to the right the friction clutch can be engaged. Thus, when either feed is engaged, the other feed is prevented.

A threading dial used to pick threads without reversing the lathe is located on the right end of the carriage. When any radial graduation mark on the revolving dial comes into line with the reference mark, the lead screw nut may be thrown into engagement to feed the tool along the work until the end of the cut is reached. The lead screw nut may be thrown out by swinging the ball handle downward and the carriage quickly run back by hand without reversing the lathe. With the carriage back to re-starting position, the lead screw nut is thrown in when the proper radial graduation marl (same mark on which first cut was started) on the revolving dial comes into line with the reference mark. The tool will accurately pick up its cut.

Power cross feed is obtained from the feed rod and is transmitted to the slide rest through a cam-mounted driving gear #14, print 608-26A, in the front top of the carriage angle. The driving gear is protected from chips and dirt by a guard closed by handle #10, p rint 608-26A, on front of carriage angle, when power cross feed is not in use. The Cam-mounted driving gear is raised by lever #3, print 608-26A, to engage slide rest lower feed screw intermediate gear #24, print 608-9A, when power cross feed is required.

When power rod feed is in use and not thread cutting is to be done the pinion on the left end of the lead screw #3, print 608-23, under the sliding guard, should be moved to the right. Thus disengaging lead screw and stopping all unnecessary wear on this ultra-precision member. The carriage may be locked to the bed by clamp, operated by lever handle #58 located under the front of the carriage angle. This feature is particularly valuable when using the lathe for facing.

<u>To Adjust Carriage Gib</u> - the upper front dovetail guideway of the carriage apron and the rear slide block of the carriage saddle are gibbed to compensate for wear. The front gib is tapered and extends the length of th e carriage. To adjust the tension of this gib loosen the slotted screw at the left end of the carriage directly above the lead screw and tighten the corresponding slotted screw #75, print 608-26, similarly located at the right end of the carriage. The slide block gib bearing on the rear of the bed is adjusted by three headless slotted screws #37, print 608-26A.

To Adjust Carriage Friction Clutch - the friction clutch controlling the feed rod transmits sufficient power for the heaviest cut. To compensate for any wear, the stop screw #11 at the top of the sp ring latch, left end of carriage is backed out. This holds the sloping friction lever #21 further "OUT"which in turn throws the clutch friction plunger #32 further "IN" by leverage and increases the expansion of the internal clutch ring #34. To adjust the stop screw, just loosen the slotted locking screw #10 and after resetting the stop screw, re-tighten the locking screw.

Item 8 - Tailstock
(Numbers in text refer to print 608-22C)

The tailstock mounts in any position on the lathe bed and is locked in place by binder handle #30 located in the rear. Spindle movement is obtained by hand operated ball handle and is registered by fractional graduations on the upper periphery of the spindle and by dial graduations to .001". Center or other attachment is automatically ejected when spindle is fully retracted. Tailstock spindle can be adjusted off center by front and rear screws #32.

Item 9 - Slide Rest
(Numbers in text refer to print 608-9A)

To Adjust Slide Rest Feed Screws - tighten slotted head screws #33 on the ends of lower and upper feed screws.

To Adjust Slide Rest Gibs - both slides are fitted with gibs to compensate for wear. The top slide is gibbed at the front so all thrust from work is taken on the ungibbed surface. This gib is adjusted by two Allen screws with lock nuts #1. The lower gib is adjusted by four Allen screws with lock nuts #51.

Item 10A - Variable Speed Drive
(Numbers in text refer to Variable Speed Drive, print 918S-16W)

The Worthington Variable Speed Drive is powered by a single speed motor. The entire drive is completely wired, per print # enclosed and tested in the factory. Main power line of proper electrical characteristics should be connected to leads of rear of cabinet. (Motor should turn clockwise viewed from left end when control lever is in forward position). If lathe is equipped with disconnect line switch, electrical control compartment door must be closed before disconnect switch can be thrown to "ON" position. Start, Stop and Reverse switch is mounted on pedestal at rear of headstock and an electro-mechanical interlock prevents line current from passing through the drum switch u ntil finger contacts are engaged.

The speed control and indicator assembly is mounted on front of cabinet. To increase speed move lever to right, to decrease speed move lever to left. Ball handle #1 locks lever in position by turning clockwise. Always release same by turning counter clockwise be-

fore moving lever. Never try to change position of speed lever when drive is not running.

If headstock driving vee belt is changed, height adjustment to secure correct belt tension may be obtained by turning jack screw #20 counter-clockwise to tighten, clockwise to loosen belt. To tension motor belt loosen nut #63 and lower belt idler pulley #60 to proper belt tension. To tension variable speed drive belt turn screw #A clockwise to tighten, counter-clockwise to loosen.

Grease gun fittings #76 are provided to lubricate motor which should be greased yearly with a good grade of light motor grease.

Item 10B - Motor Jackshaft Drive
(Numbers in text refer to Motor Jackshaft Drive, print 918R-16) (No brake is furnished)

The motor jackshaft drive is powered by a two speed motor. The entire drive is completely wired, per print enclosed and tested in the factory. Main power line of proper electrical characteristics should be connected to leads at rear of cabinet. (Motor should turn clockwise viewed from left end when control lever is in forward position.) If lathe is equipped with disconnect line switch, electrical control compartment door must be closed before disconnect switch can be thrown to "ON" position. Start, Stop and Reverse switch is mounted on p edestal at rear of headstock and an electro-mechanical interlock prevents line current from passing through the drum switch until finger contacts are engaged.

To obtain proper production speeds, three ranges are available by shifting vee belt on - 3-stop motor and jackshaft sheaves. Release latching handle #1 by swinging forward, thus bringing motor plate and motor forward. Shift belt manually for speed desired referring to chart control lever. Lock latching handle #1 by pushing back. Never run drive with motor in forward position.

If headstock driving vee belt is changed, height adjustment to secure correct tension may be obtained by loosening hex stud clamping bolts #47 and turning jackshaft #6 counter-wise to tighten, clockwise to loosen belt.

Jackshaft is mounted in self-alignment ball bearings, but alignment of sheaves must be m aintained.

Alteration of headstock driving belt ordinarily required a corresponding tensioning of motor vee belt on three step sheaves which is accompanied by turning toggle rod nut #23 clockwise to tighten, counter-clockwise to loosen belt. After adjusting toggle rod nut #23 hex nuts #5 on either side of motor should be slightly tightened to secure proper locking of action of latching handle #1.

Motor is provided with grease fittings which should be greased yearly with good grade of light motor grease.

GEAR TABLE FOR STANDARD THREADS

608 LATHE

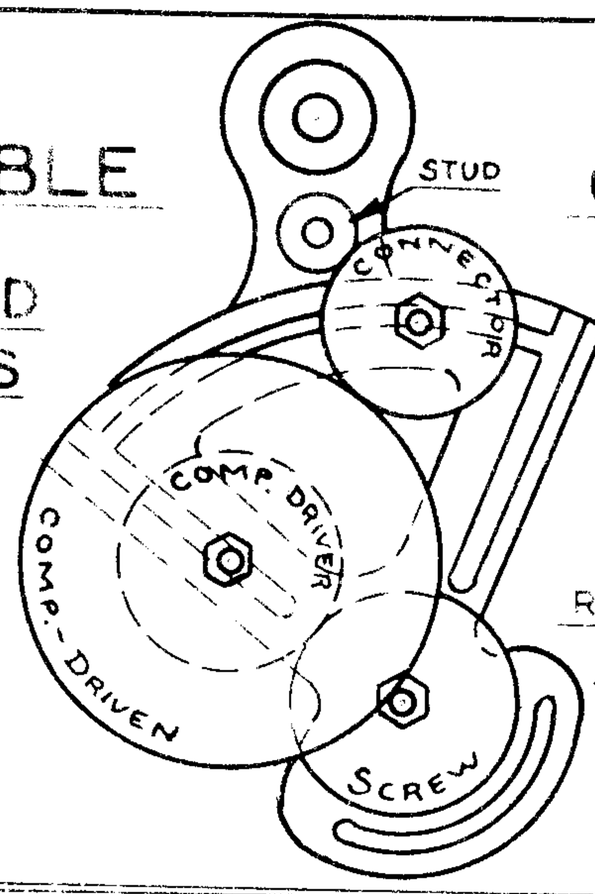

LATHE SCREW CONSTANT = 4

LEAD SCREW = 8 P

FORMULA.

$$N = \frac{2S \times P}{C \times L}$$

RIVETT L.& G. INC.
BRIGHTON DIST.
BOSTON, MASS. U.S.A.

No. Threads	Stud	Compound Driven	Compound Driver	Screw	No. Threads	Stud	Compound Driven	Compound Driver	Screw
10	24			60	30	24	120	60	90
11	24			66	32	24	120	60	96
11½	24			69	34 *	24	120	60	102*
12	24			72	36	24	120	60	108
13	24			78	38 *	24	120	60	114*
14	24			84	40	24	120	60	120
15	24			90	44	24	120	30	66
16	24			96	48	24	120	30	72
17 *	24			102*	52	24	120	30	78
18	24			108	56	24	120	30	84
19 *	24			114*	60	24	120	30	90
20	24			120	64	24	120	30	96
22	24	120	60	66	68 *	24	120	30	102*
24	24	120	60	72	72	24	120	30	108
25	24			150	76 *	24	120	30	114*
26	24	120	60	78	80	24	120	30	120
27	24	120	60	81	90 *	24	120	30	135*
28	24	120	60	84	100	24	120	30	150

S = NO. OF TEETH ON STUD GEAR.
P = NO. OF THREADS TO BE CUT.
C = RATIO OF COMPOUND.
L = NO. OF THREADS PER INCH ON LEAD SCREW.
N = NO. OF TEETH IN GEAR ON LEAD SCREW

* - SPECIAL THREADS - GEARS NOT FURNISHED WITH STANDARD EQUIPMENT.

GT-10

REVISED [illegible]

608 LATHE WITH QUICK CHANGE GEAR BOX

GEAR TABLE FOR STANDARD AND SPECIAL THREADS

LEAD SCREW = 8 PITCH
LATHE SCREW CONSTANT = 4

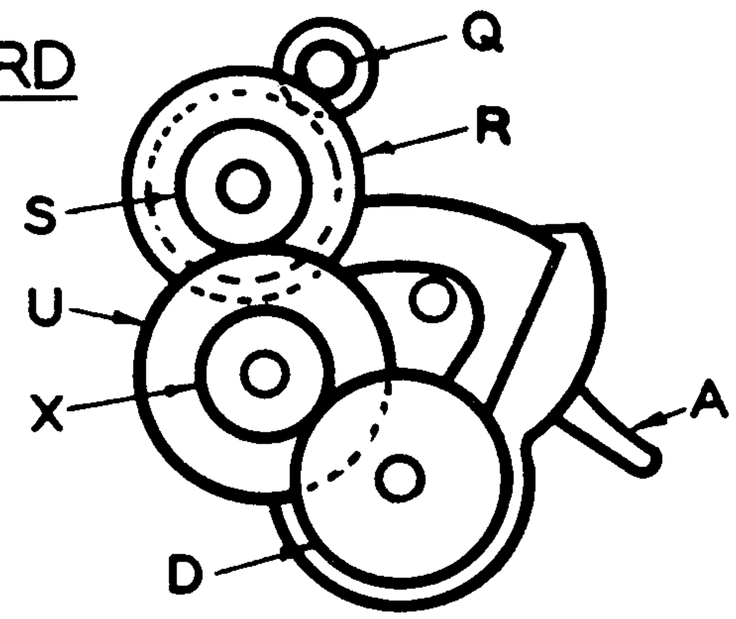

SET-UP FOR SPECIAL SCREW THREADS

FORMULA FOR SPECIAL SET-UP - $N = \frac{PQSX}{4RU}$

WHERE - N = NO OF TEETH IN GEAR D
P = NO OF THDS PER INCH TO BE CUT
AND S-Q-R-U-X = NO OF TEETH IN GEARS S-Q-R-U-X RESPECTIVELY

THREADS CUT DRIVING THRU REGULAR GEAR BOX

NO OF THREADS PER INCH — POSITION OF LEVER "A" LEFT						RIGHT	STUD DRIVER	STUD DRIVEN	COMPOUND DRIVER	COMPOUND DRIVEN
10	11	12	13	14	16	18	30	60	70	70
20	22	24	26	28	32	36	18	72	70	70
40	44	48	52	56	64	72	30	60	28	112
80	88	96	104	112	128	144	18	72	28	112
SWING GEAR BOX TO ENGAGE 18T.						30	18	60	70	70
GEAR ON STUD WITH 60T SLIDING GEAR						120	18	60	28	112

THREADS CUT WITH SPECIAL SET-UP PER SKETCH – LEVER "A" IN NEUTRAL

THDS PER INCH	STUD Q DRIVER	STUD R DRIVEN	S DRIVER	T CONNECTING	COMPOUND U DRIVEN	COMPOUND X DRIVER	D LEAD SCR.
11½	30	60	48	90			69
15	30	60	48	90			90
17*	30	60	48	90			102*
25*	18	72	48	90			75*
27	18	72	48	90			81
34*	18	72	48	90			102*
38*	18	72	32	90			76*
42*	18	72	32	90			84*
50*	18	72	32	90			100*
54*	18	72	32	90			108*
60*	18	72	32		80*	60*	90
68*	18	72	48		90*	45*	102*
76*	18	72	32		90*	45*	76*
100*	18	72	32		90*	45*	100*

* SPECIAL THREADS – GEARS NOT FURNISHED WITH STANDARD EQUIPMENT

GT-12

RIVETT LATHE & GRINDER INC.

WAS RLC 17

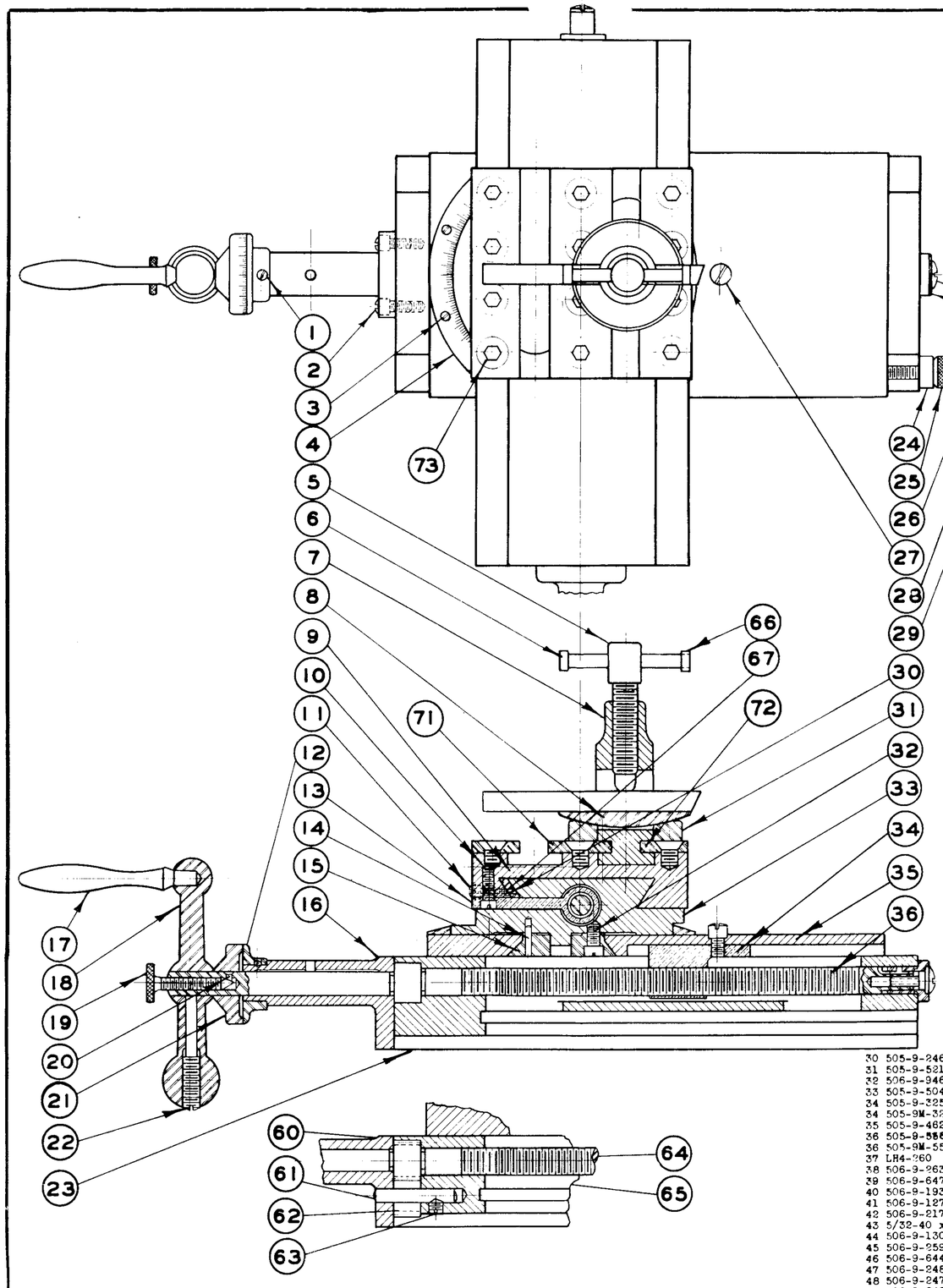

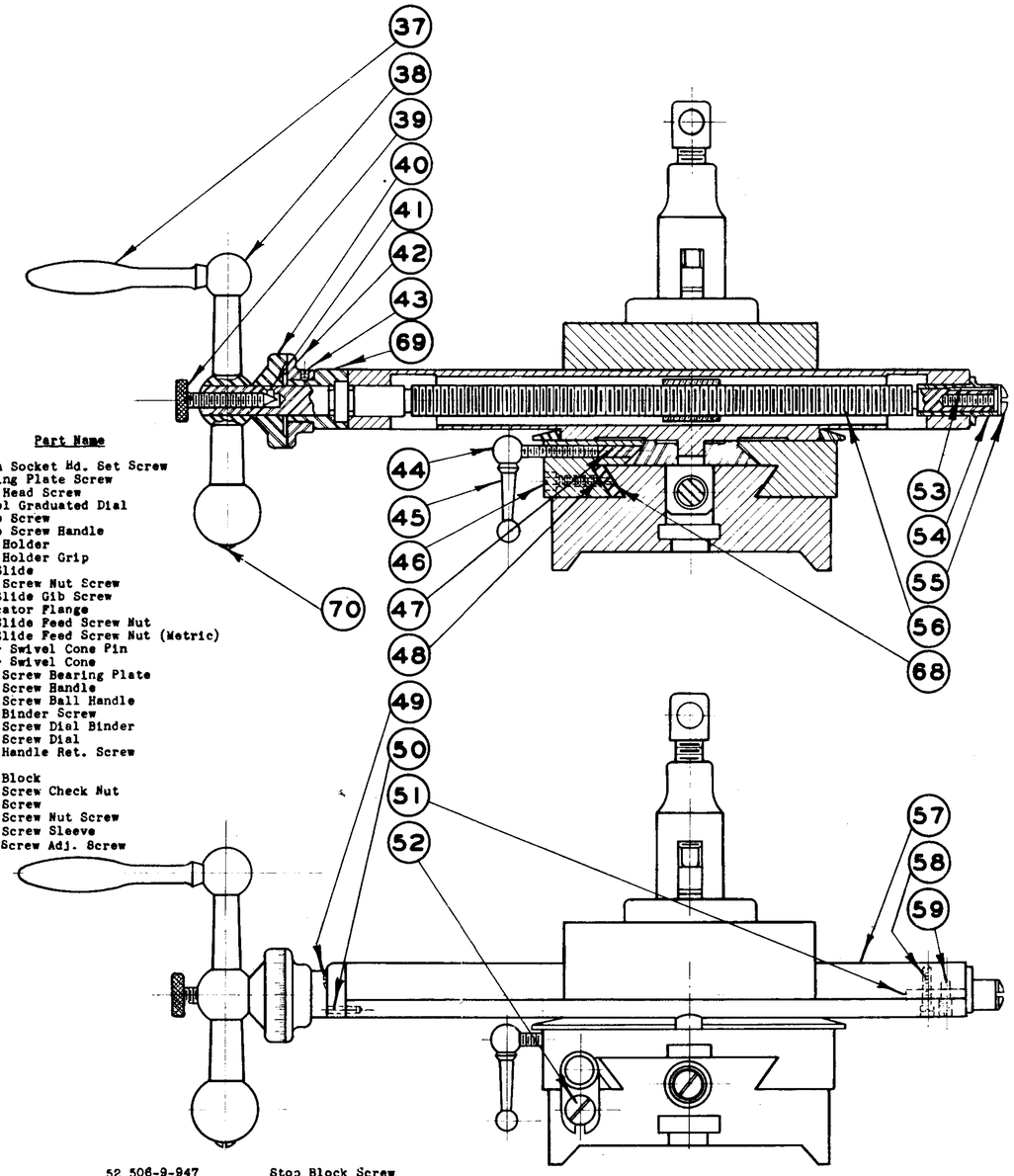

No.	Part No.	Part Name
1	5/32-40 x 1/8 Lg.	Allen Socket Hd. Set Screw
2	506-9-641	Bearing Plate Screw
3	#4-40 x 1/4"	Fil. Head Screw
4	505-9-193	Swivel Graduated Dial
5	506-9-948	Clamp Screw
6	506-9-262	Clamp Screw Handle
7	505-9-733	Tool Holder
8	506-9-249	Tool Holder Grip
9	505-9-464	Top Slide
10	506-9-637	Feed Screw Nut Screw
11	506-9-646	Top Slide Gib Screw
12	505-9-217	Indicator Flange
13	505-9-324	Top Slide Feed Screw Nut
13	505-9M-324	Top Slide Feed Screw Nut (Metric)
14	506-9-355	Lower Swivel Cone Pin
15	506-9-187	Lower Swivel Cone
16	505-9-374	Feed Screw Bearing Plate
17	506-9-260	Feed Screw Handle
18	506-9-261	Feed Screw Ball Handle
19	506-9-647	Dial Binder Screw
20	506-9-127	Feed Screw Dial Binder
21	506-9-193	Feed Screw Dial
22	506-9-642	Ball Handle Ret. Screw
23	505-9-115	Base
24	506-9-133	Stop Block
25	506-9-326	Stop Screw Check Nut
26	506-9-643	Stop Screw
27	506-9-645	Feed Screw Nut Screw
28	505-9-117	Feed Screw Sleeve
29	506-9-638	Feed Screw Adj. Screw
30	505-9-246	Top Slide Gib
31	505-9-521	Tool Holder Washer
32	506-9-946	Lower Swivel Cone Screw
33	505-9-504	Lower Swivel
34	505-9-325	Feed Screw Nut
34	505-9M-325	Feed Screw Nut (Metric)
35	505-9-462	Bottom Slide
36	505-9-558	Feed Screw
36	505-9M-558	Feed Screw (Metric)
37	LH4-260	Top Slide Feed Scr. Handle
38	506-9-263	Feed Scr. Ball Handle for Top Slide
39	506-9-647	Dial Binder Screw
40	506-9-193	Feed Screw Dial
41	506-9-127	Feed Screw Dial Binder
42	506-9-217	Indicator Flange
43	5/32-40 x 1/8 Lg.	Allen Socket Hd. Set Screw
44	506-9-130	Lower Swivel Cone Gib Binder
45	506-9-259	Lower Swivel Cone Gib Binder Handle
46	506-9-644	Bottom Slide Gib Screw
47	506-9-248	Lower Swivel Cone Gib
48	506-9-247	Bottom Slide Gib
49	506-9-646	Indicator Flange Supporting Screw
50	506-9-357	Indicator Support Pin
51	506-9-134	Lower Swivel Block
52	506-9-947	Stop Block Screw
53	506-9-287	Feed Screw Sleeve Key
54	505-9-457	Top Slide Feed Screw Sleeve
55	506-9-638	Feed Screw Adj. Screw
56	505-9-557	Top Slide Feed Screw
56	505-9M-557	Top Slide Feed Screw (Metric)
57	505-9-504	Lower Swivel
58	506-9-650	Lower Swivel Block Screw
59	506-9-199	Lower Swivel Block Dowel
60	505-9-374	Feed Screw Bearing Plate
61	106-20-356	Intermediate Gear Pin
62	608-9-226	Lower Feed Screw Int. Gear
63	SHR-1031	Int. Gear Pin Set Screw
64	608-9-559	Bottom Slide Feed Screw
64	608-9M-559	Bottom Slide Feed Screw (Metric)
65	505-9-115	Base
66	506-9-188	Collar for Clamp Screw Handle
67	103-16-199	Top Slide Gib Pin
68	506-9-354	Bottom Slide Gib Dowel Pin
69	505-9-568	Indicator Flange Support
70	506-9-949	Ball Handle Ret. Scr. for Top Slide
71	505-9-376	Top Slide Plate (Inner)
72	505-9-375	Top Slide Plate (Outer)
73	505-9-637	1/4-28 Flat Head Screw

SLIDE REST

ROCKER TOOL HOLDER TYPE

NEWETT LATHE & GRINDER INC.
BOSTON, MASS.
Drawn by G. D.B.R.H. Date 5/3/43
Traced by ..... Date .....
Checked by ..... Scale FULL
505-9A

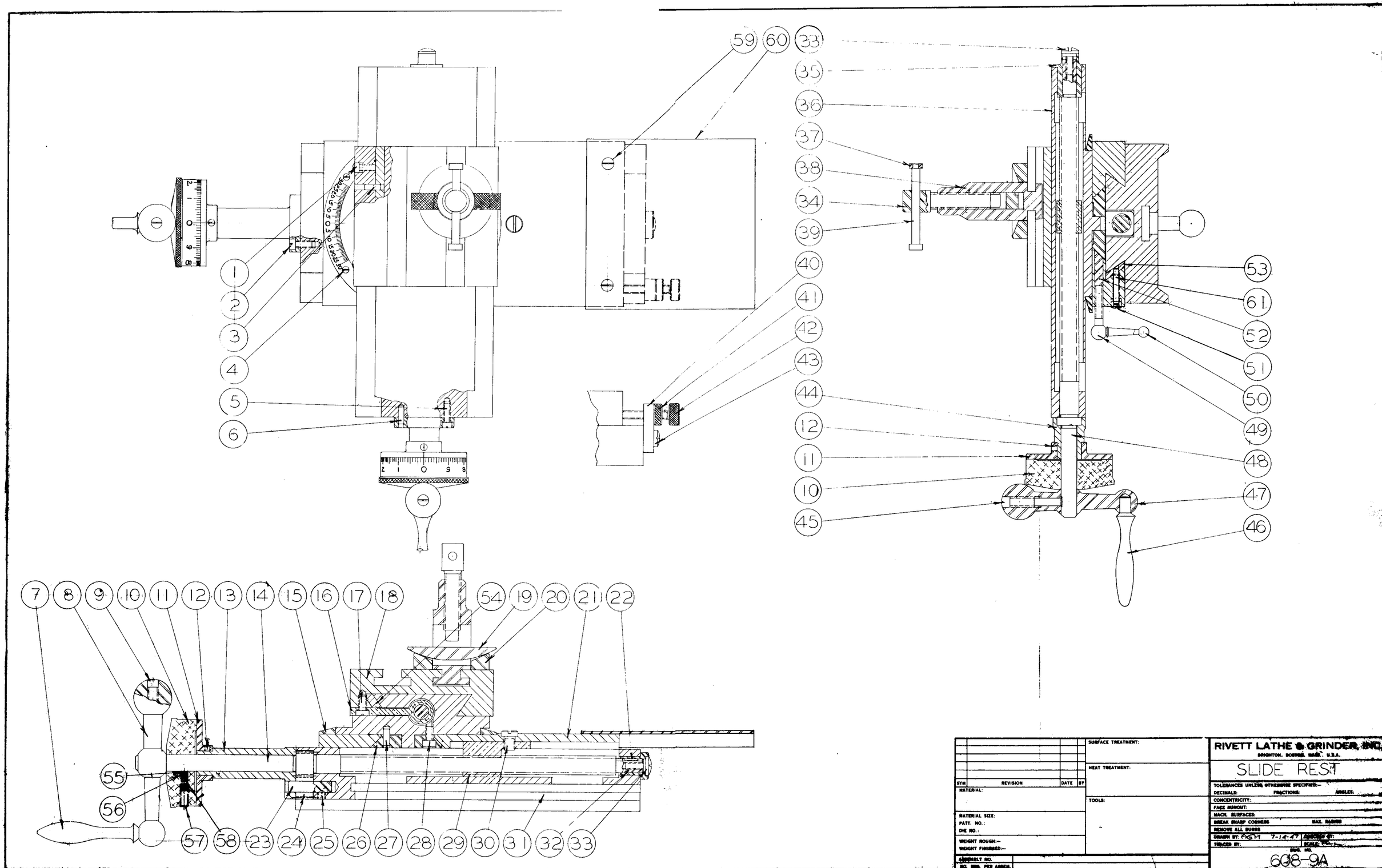
59 60 33 35 36 37 38 34 39 40 41 42 43 44 12 11 10 45
53 61 52 51 50 49 48 47 46
1 2 3 4 5 6
7 8 9 10 11 12 13 14 15 16 17 18 54 19 20 21 22
55 56 57 58 23 24 25 26 27 28 29 30 31 32 33
SYM REVISION DATE BY
MATERIAL:
MATERIAL SIZE:
PATT. NO.:
DIE NO.:
WEIGHT ROUGH:--
WEIGHT FINISHED:--
ASSEMBLY NO.
NO. REQ. PER ASSEM.
SURFACE TREATMENT:
HEAT TREATMENT:
TOOLS:
RIVETT LATHE & GRINDER, INC.
BRIGHTON, BOSTON, MASS., U.S.A.
SLIDE REST
TOLERANCES UNLESS OTHERWISE SPECIFIED:--
DECIMALS: FRACTIONS: ANGLES:
CONCENTRICITY:
FACE RUNOUT:
MACH. SURFACES:
BREAK SHARP CORNERS MAX. RADIUS
REMOVE ALL BURRS
DRAWN BY: GGM 7-14-47
TRACED BY:
SCALE:
DWG. NO.
608-9A

RIVETT LATHE & GRINDER INC.

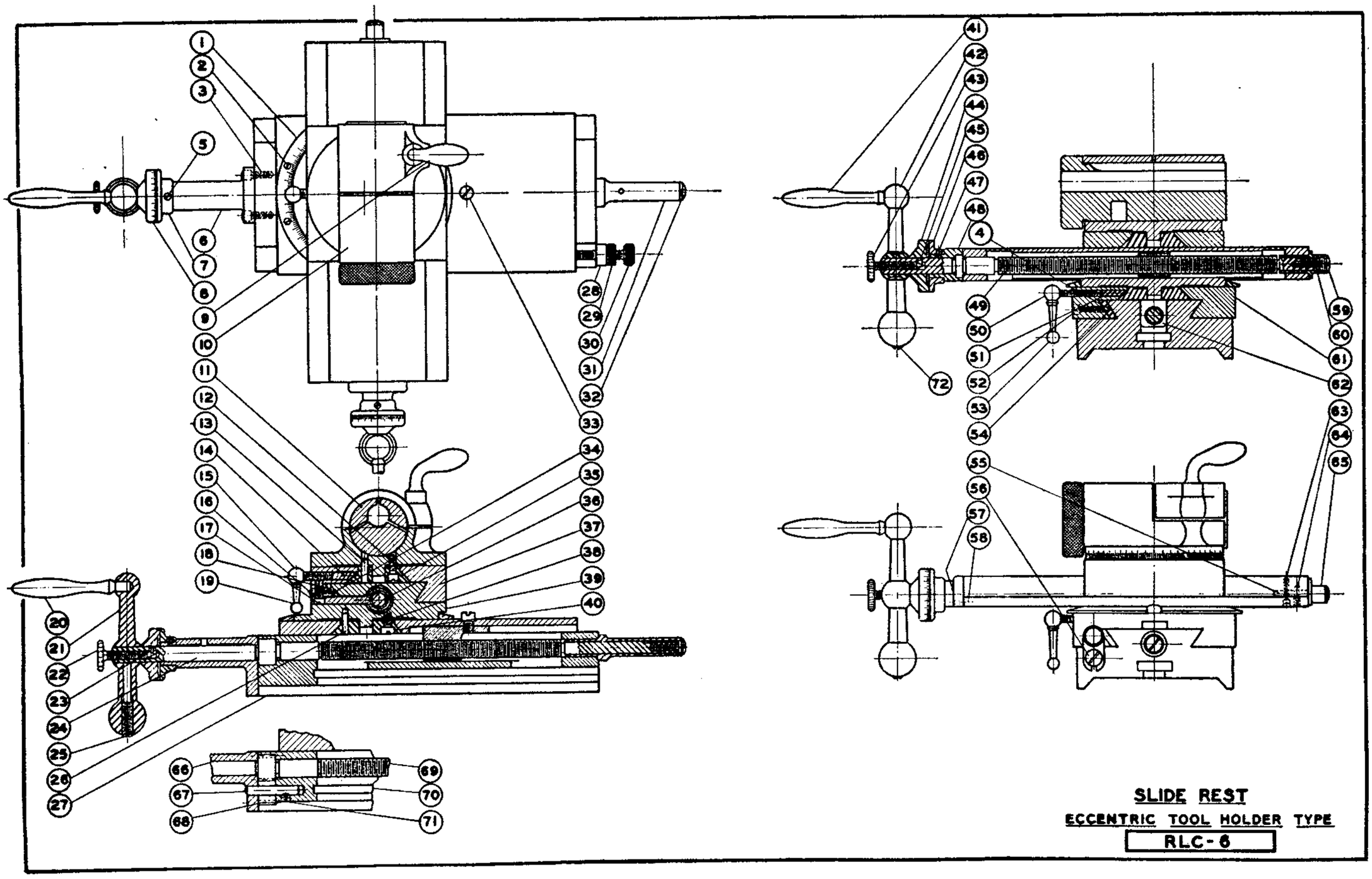

PARTS LIST

Reference Number	Symbol	Name of Part
1	505-9-193	Lower swivel graduated ring
2		#4-40 x 1/4" Fil head screw "f"
3	506-9-641	Bearing plate screw
4	506-9-354	Gib pin
5	506-9-639	Indicator flange set screw
6	505-9-374	Feed screw bearing plate
7	506-9-217	Indicator flange
8	506-9-193	Feed screw dial
9	505-9-128	Tool holder binder
10	506-9-503	Top swivel
11	506-9-274	Eccentric tool holder
12	506-9-648	Top swivel cone screw
13	506-9-358	Top swivel cone pins
14	506-9-245	Top swivel cone gib
15	506-9-129	Top swivel cone gib binder
16	506-9-646	Top slide gib screw
17	506-9-637	Top slide feed screw nut screw
18	505-9-246	Top slide gib
19	506-9-258	Top swivel cone gib screw handle
20	506-9-260	Feed screw handle for bottom slide
21	506-9-261	Feed screw ball handle for bottom
22	506-9-647	Dial binder screw slide
23	506-9-127	Feed screw dial binder
24	505-9-556	Bottom slide feed screw
24	505-9M-556	Bottom slide feed screw, metric
25	506-9-642	Ball handle ret. screw for bottom
26	506-9-355	Lower swivel cone pin slide
27	505-9-115	Base
28	506-9-133	Bottom slide stop block
29	506-9-326	Bottom slide stop screw check nut
30	506-9-643	Bottom slide stop screw
31	506-9-457	Bottom slide feed screw sleeve
32	506-9-638	Feed screw adj. screw
33	506-9-645	Bottom slide feed screw nut screw
34	103-16-199	Top slide gib pin
35	506-9-186	Top swivel cone
36	505-9-324	Top slide feed screw nut
36	505-9M-324	Top slide feed screw nut, metric

Reference Number	Symbol	Name of Part
37	505-9-461	Top slide
38	506-9-946	Lower swivel cone screw
39	505-9-504	Lower swivel
40	506-9-187	Lower swivel cone
41	LH4-260	Feed screw handle for top slide
42	506-9-263	Feed screw ball handle for top
43	506-9-647	Dial binder screw slide
44	506-9-193	Feed screw dial
45	506-9-127	Feed screw dial binder
46	506-9-217	Indicator flange
47	506-9-639	Indicator flange set screw
48	505-9-568	Indicator flange support
49	505-9-557	Top slide feed screw
49	505-9M-557	Top slide feed screw, metric
50	506-9-130	Lower swivel cone gib binder
51	506-9-248	Lower swivel cone gib
52	506-9-644	Bottom slide gib screw
53	506-9-259	Lower swivel cone gib binder handle
54	506-9-247	Lower slide gib
55	506-9-134	Lower swivel block
56	506-9-947	Stop block screw
57	506-9-646	Indicator flange supporting screw
58	506-9-357	Indicator flange supporting pin
59	506-9-638	Feed screw adj. screw
60	506-9-287	Feed screw sleeve key
61	505-9-462	Bottom slide
62	505-9-325	Bottom slide feed screw nut
62	505-9M-325	Bottom slide feed screw nut, metric
63	506-9-199	Lower swivel block screw
64	506-9-650	Lower swivel block dowel
65	505-9-456	Top slide feed screw sleeve
66	505-9-374	Feed screw bearing plate
67	106-20-356	Intermediate gear pin
68	608-9-226	Lower feed screw int. gear
69	608-9-558	Bottom slide feed screw
69	608-9M-558	Bottom slide feed screw metric
70	505-9-115	Base
71	SHR-1031	Int. gear pin set screw slide
72	506-9-949	Ball handle retaining screw for top

WAS RLC 11

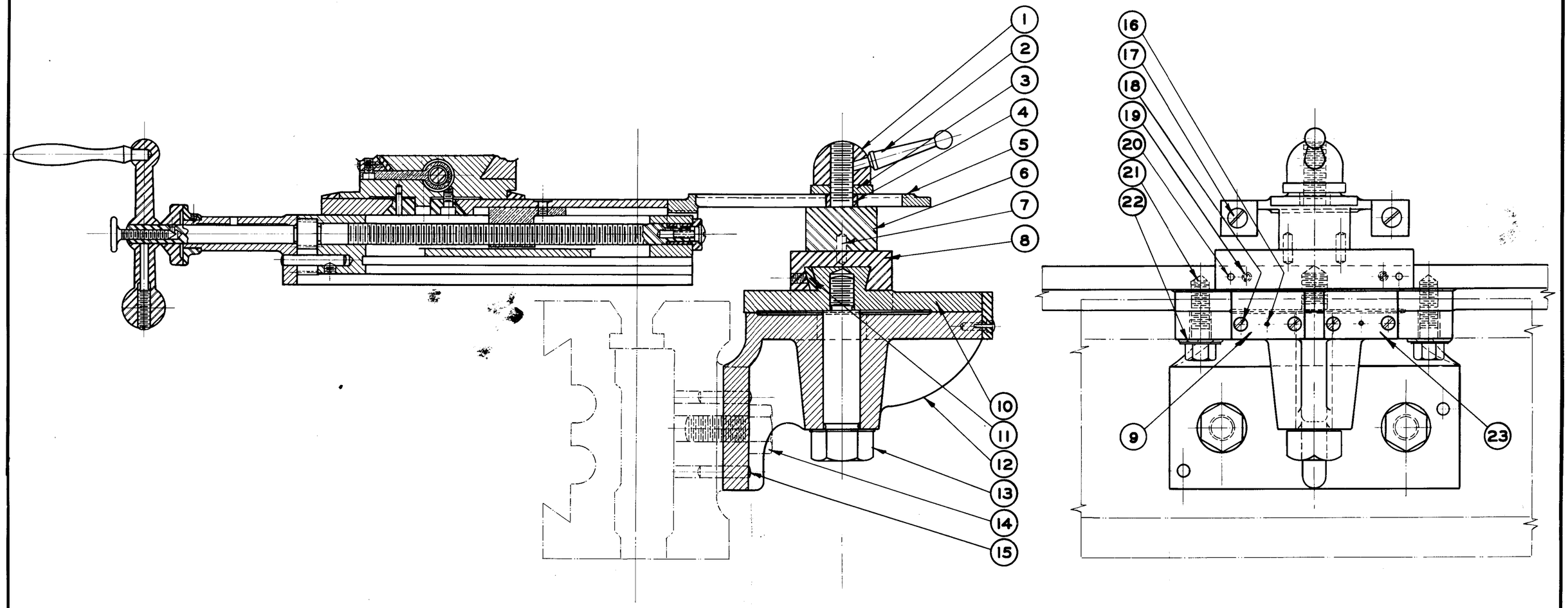

TAPER ATTACHMENT

BARNETT LATHE & GRINDER INC.
BOSTON, MASS.
Drawn by WRC Date 5-4-43
Traced by ..... Date .....
Checked by ..... Scale Full
608-11

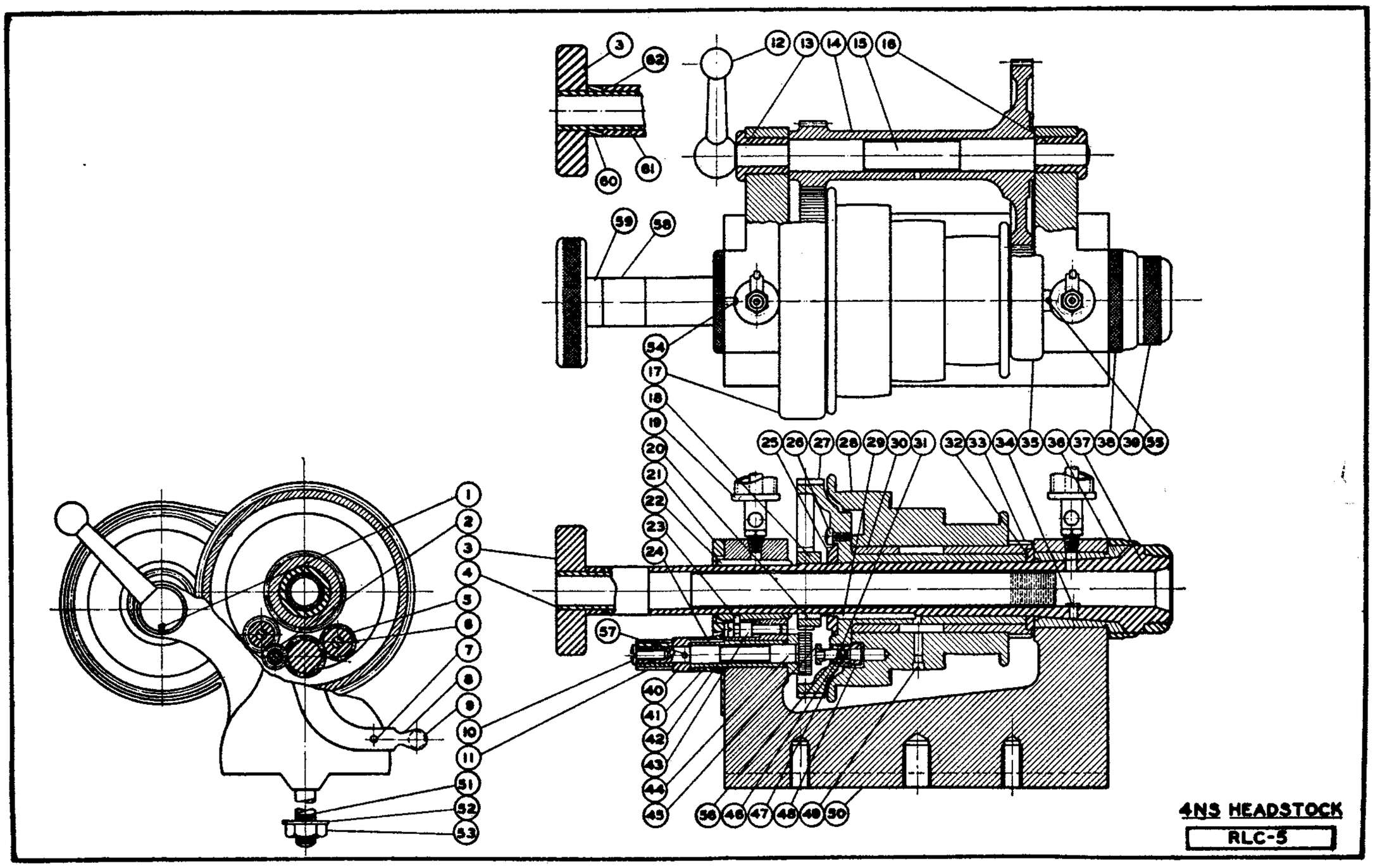

PARTS LIST

Reference Number	Symbol	Name of Part
1	608-12-640	Bushing set screw
2	607-12-228	Switch gear (12 T)
3	103-12-292	Draw-in spindle knob
4	608-12-467A	Draw-in spindle
5	607-12-227	Switch gear (18 T)
6	607-12-498	Switch gear stud
7	607-12-354	Switch lever pin
8	606-12-303	Switch lever
9	LOJ-257	Lever Handle
10	608-12-641	Stud gear retain. screw
11	607-12-230	Stud gear (15 T)
11	607-12-231	Stud gear (24 T)
12	608-12-302	Gear shaft lever
13	608-12-154	Gear shaft bushing (rear)
14	608-12-230	Back gear
15	608-12-440	Back gear shaft
16	608-12-153	Gear shaft bushing (front)
17	608-12-252	Gear guard (left)
18	608-12-228	Spindle gear
19		Blanchard oil cup #100-1
20	608-12-288	Spindle gear key
21	504-12-419	Rear dust ring
22	103-12-118	Rear bearing
23	103-12-287	Rear bearing key
24	606-12-289	Lever key
25	608-12-330	Driving gear check nut
26	608-12-642	Check nut set screw
27	608-12-227	Driving gear
28	608-12-390	Pulley
29	608-12-287	Driving gear key
30	608-12-151	Pulley bushing
31	SH-1032	Locating pin screw
32	608-12-473	Spacer
33	608-12-226	Pulley gear
34	506-12-287	Spindle key
35	608-12-251	Gear guard (right)
36	103-12-117	Front bearing
37	608-12-466	Headstock spindle
38	103-12-419	Front dust ring
39	103-12-251	Spindle nose guard
40	606-12-190	Switch gear collar
41	606-12-155	Switch lever bushing
42	608-12-634	Switch
43	103-12-638	Rear bearing adjusting screw
44	608-12-229	Switch gear (22T)
45	608-12-329	Stop pin nut
46	608-12-361	Locating pin
47	608-12-360	Pulley stop pin
48	608-12-152	Stop pin bushing
49	103-17-639	Oil screw
50	608-12-270	Headstock
51	608-12-498	Binder stud
52	WH-748	Binder bolt washer
53		Binder bolt nut
54	SF-1021	Rear dust cap screw
55	SF-1019	Gear guard screw
56	608-12-479	Locating pin spring
57		Collar pin
58	608-12-189	Loose Collar
59	608-12-188A	Draw-in spindle collar
60	608-12-188B	Draw-in spindle collar for quick change gear box
61	608-12-467B	Draw-in spindle for quick change gear box
62	608-12-188C	Loose Collar

WAS RLC 15

No.	Part No.	Part Name
1	608-5C-12-271	Headstock
2	608-5C-12-253A	Gear Guard (R.H.)
3	608-5C-12-252A	Gear Guard (L.H.)
4	608-5C-12-993	Spindle Gear Guard
5	505-5C-12-292	Draw-in Spindle Knob
6	608-5C-12-191	Spacing Collar
7	608-5C-12-469	Draw-in Spindle
8	CX21-288	Spindle Gear Key
9	608-12-233	Spindle Gear (60-T)
10	608-5C-12-164	Rear Dust Ring
11	#8-32 x 3/8	Fill. Head Screw
12	#000	Lunkenheimer Oil Cup
13	608-5C-12-152	Rear Bushing
14	608-5C-12-232	Driving Gear
15	608-12-642	Check Nut Set Screw
16	608-5C-12-224	Gear Check Nut
17	608-5C-12-155	Pulley Bushing
18	608-12-287	Driving Gear Key
19	608-5C-12-468	Headstock Spindle
20	608-5C-12-391	Pulley
21	103-17-287	Pulley Gear Key
22	608-5C-12-231	Pulley Gear
23	608-5C-12-151	Front Bushing
24	608-5C-12-287	Spindle Key
25	608-5C-12-163	Front Dust Cap
26	505-5C-12-251	Spindle Nose Guard
27	608-12-640	Gear Shaft Lever Scr.
28	608-12-154	Gear Shaft Bushing
29	504-12-267	Index Pin Knob
30	608-5C-12-372	Index Pin
31	608-5C-12-521	Hinge Washer
32	608-5C-12-235	Back Gear
33	608-12-440	Back Gear Shaft
34	#8-32x3/8	Fill. Head Screw
35	608-12-153	Gear Shaft Bushing
36	608-12-302	Gear Shaft Lever
37	1/4-28 x 1/4	Allen Set Screw
38	1/4"-20 x 3/8"	Allen Set Screw
39	608-12-499	Int. Gear Stud
40	608-12-157	Int. Gear Bushing
41	608-12-232	Int. Gear (18-T)
42	1/4"-20 x 3/8"	Allen Set Screw
43	#10-32 x 1/2"	Fill. Head Screw
44	608-12-498	Binder Stud
45	WH-748	Binder Stud Washer
46	7/16-14	Hex. Nut
47	5/32"	Ball
48	608-20-666	Spring
49	#10-32 x 1/8	Set Screw
50	608-12-641	Stud Gear Ret. Scr.
51	608-12-500	Switch gear Stud
52	#10-32 x 1/8	Set Screw
53	608-12-290	Collar Key
54	608-12-190	Stud Gear Drive Collar
55	608-12-234	Switch Gear
56	608-12-158	Gear Bushing
57	103-12-287	Rear Bushing Key
58	103-12-638	Rear Bushing Key Scr.
59	608-5C-12-356	Detent Pin
60	608-5C-12-156	Drive Pin Bushing
61	608-20-666	Drive Pin Spring
62	608-5C-12-355	Drive Pin
63	103-17-639	Oil Screw
64	608-5C-12-473	Pulley Spacer
65	608-5C-12-236	Stud Gear (24 T)
66	608-5C-12-237	Stud Gear (15 T)
67	608-5C-12-705	Gear Guard Hinge
68	608-5C-12-192	*Collar
69	L08-5C-470	*Draw-In Spindle
70	608-5C-12-188	Collar

*With Gear Box or Lever Chuck Closer

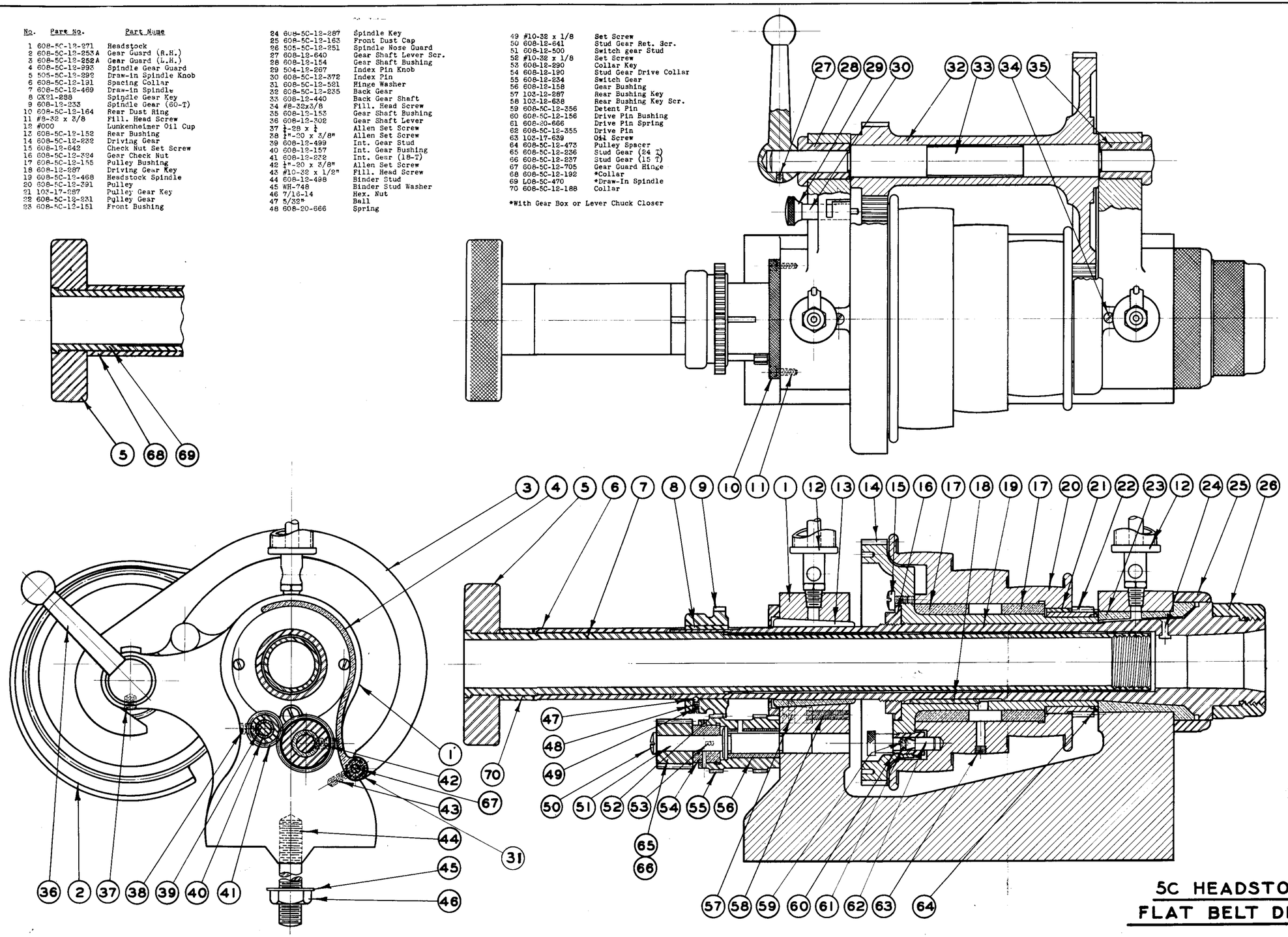

5C HEADSTOCK
FLAT BELT DRIVEN

HOWETT LAMB & BARBER INC.
BOSTON, MASS.
Drawn by G.DER.H. Date 5/3/43
Traced by _____ Date _____
Checked by _____ Date FULL
608-5C-12

WAS RLC33

No.	Part No.	Part Name
1	608-5C-12-252A	Gear & Belt Guard
2	608-5C-12-993	Spindle Gear Guard
3	505-5C-12-292	Draw-in Spindle Knob
4	608-5C-12-191	Spacing Collar
5	608-5C-12-469	Draw-in Spindle
6	0X21-288	Spindle Gear Key
7	608-12-233	Spindle Gear (60 T)
8	608-5C-12-164	Rear Dust Ring
9	#8-32 x 3/8	Fill. Head Screw
10	608-5C-12-162	Rear Bushing
11	608-5C-12-271A	Headstock
12	#000	Lunkenheimer Oil Cup
13	608-5C-12-232	Driving Gear
14	608-12-642	Stop Screw
15	608-5C-12-324	Check Nut
16	608-5C-12-155	Pulley Bushing
17	608-12-287	Driving Gear Key
18	608-5C-12-468	Headstock Spindle
19	608-5C-12-392	Headstock Sheave
20	103-17-287	Pulley Gear Key
21	608-5C-12-231	Pulley Gear
22	#000	Lunkenheimer Oil Cup
23	608-5C-12-287	Spindle Key
24	608-5C-12-151	Front Bushing
25	608-5C-12-163	Front Dust Ring
26	505-5C-12-251	Spindle Nose Guard
27	608-12-640	Lever Screw
28	608-12-194	Rear Bushing
29	504-12-267	Index Pin Knob
30	608-5C-12-354	Index Pin
31	#8-32 x 3/8	Fill. Head Screw
32	608-5C-12-235	Back Gear
33	608-12-440	Back Gear Shaft
34	#8-32 x 3/8	Fill. Head Screw
35	608-12-153	Front Bushing
36	5/32"	Ball
37	608-5C-12-667	Spring
38	#10-32 x 1/8	Set Screw
39	608-12-641	Stud Gear Screw
40	608-12-500	Switch Gear Stud
41	#10-32 x 1/8	Set Screw
42	608-12-290	Collar Key
43	608-5C-12-236	Stud Gear (24 T)
44	608-5C-12-237	Stud Gear (15 T)
45	608-12-190	Drive Collar
46	608-12-234	Switch-Gear-30T
47	608-12-158	Gear Bushing
48	103-18-287	Rear Bushing Key
49	103-12-638	Bushing Key Screw
50	608-5C-12-355	Drive Pin
51	608-5C-12-356	Detent Pin
52	608-20-666	Drive Pin Spring
53	608-5C-12-156	Drive Pin Bushing
54	103-17-639	Oil Screw
55	608-5C-12-473	Pulley Spacer
56	608-5C-12-188	Collar
57	1-20 x 3/8	Allen Set Screw
58	608-5C-12-705	Gear Guard Hinge
59	#10-32 x 3/8	Fill. Head Screw
60	608-12-498	Binder Stud
61	WH-748	Binder Stud Washer
62	608-12-302	Gear Shaft Lever
63	608-5C-12-253A	Back Gear Guard
64	1-28 x 1/2	Allen Set Screw
65	1-20 x 3/8	Allen Set Screw
66	608-12-499	Int. Gear Stud
67	608-12-157	Int. Gear Bushing
68	608-12-232	Int. Gear (18 T)
69	7/16-14	Hex. Nut
70	608-5C-12-192	*Collar
71	L08-5C-470	*Draw-in Spindle
72	608-5C-12-357	Detent Pin
73	1-20 x 1/2	Set Screw
74	608-5C-12-666	Spring
75	608-5C-12-521	Hinge Washer

*With Gear Box or Lever Chuck Closer

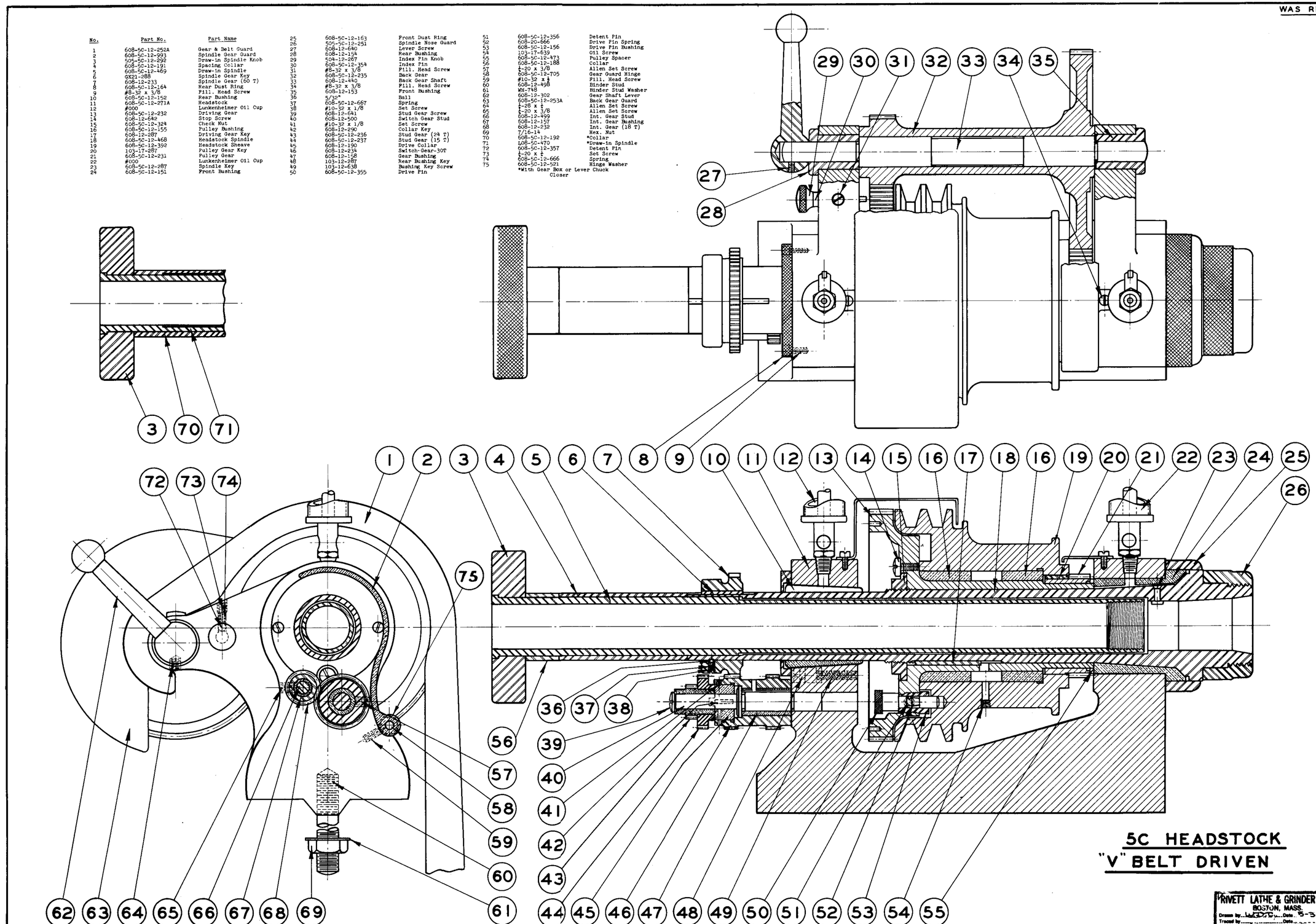

5C HEADSTOCK
"V" BELT DRIVEN

RIVETT LATHE & GRINDER INC.
BOSTON, MASS.
Drawn by ..... Date 5-3-43
Traced by ..... Date
Checked by ..... Scale

608-5C-12A

No.	Part No.	Part Name
1	608-20-241	Compound Gear 112T.
2	240	Compound Gear 70T.
3	666	Lock Ball Spring
4	5/32 dia.	Lock Ball
5	608-20-639	Thimble Retaining Screw
6	717	Compound Gear Thimble
7	379	Gear Case - front plate
8	258	Tumbler Handle
9	816	Tumbler Driving Gear
10	672	Tumbler Driving Gear Key
11	440	Tumbler Shaft
12	380	Gear Case - rear plate
13	442	Change Gear Shaft
14	#4-40 x 5/8 lg.	Fill. Head Screw
15	608-20-540	Yoke
16	118	Change Gear Shaft Bearing
17	324	Change Gear Shaft Nut
18	818	Change Gear 40T.
19	819	Change Gear 44T.
20	820	Change Gear 48T.
21	821	Change Gear 52T.
22	822	Change Gear 56T.
23	823	Change Gear 64T.
24	824	Change Gear 72T.
25	290	Shaft End Key
26	¼-20 x 3/8 lg.	Allen Headless Set Screw
27	#10-32 x 3/16 lg.	Allen Headless Set Screw
28	103-4B-511	Nut Binding ScrewTip
29	608-20-205	Change Gear Dowel
30	103-17-199	Change Gear Dowel
31	#8-32 x 3/8 lg.	Flat Head Screw
32	608-20-259	Ball Handle
33	153	Plunger Bushing
34	369	Index Pin
35	668	Plunger Spring
36	382	Index Plate
37	817	Tumbler Idler Gear
38	156	Idler Gear Bushing
39	239	Fixed Compound Small Gear
40	238	Fixed Compound Large Gear
41	291	Compound Shaft Key
42	638	Gear Retaining Screw
43	#4-40 x 3/8 lg.	Fill. Head Screw
44	608-20-441	Compound Shaft
45	#101 Style "B"	Gits Oil Cup
46	608-20-193	Compound Shaft Collar
47	#10-32x3/16 lg.	Allen Headless Set Screw
48	608-20-235	1st. Compound Gear
49	670	Compound Shaft Key
50	#10-32x3/16 lg.	Fillister Head Screw
51	608-20-262	Nut Tightening Pin
52	129	Yoke Binder
53	325	Yoke Binder Nut
54	522	Yoke Binder Washer
55	#0C-¼	Bowen Oil Cup
56	5/16-18x3/4 lg.	Allen Cap Screw (4 req.)
58	#8-32 x 3/8 lg.	Fillister Head Screw
59	608-20-671	Compound Gear Thimble Key
60	#0C-¼	Bowen Oil Cup
61	608-20-677	Gear Box Thread Table - English
61	608-20M-677 or	" " " " - Metric
62	608-20-172	Gear Case
63	#10-32 x 5/8 lg.	Fillister HeadScrew
64	506-9-356	Dowel Pin
65	608-20-637	Change Gear Shaft End Screw
66	236	Small Stud Gear - 4 N.S. collet
66	236A or	" " " - 5C collet
67	237	Large Stud Gear
68	361	Dowel Pin
69	188	Change Gear Shaft Collar ½" lg.
69	190	" " " " 3/8" lg.
69	191	" " " " 1/8" lg.
70	811	Change Gear 69T.
70	812	" " 48T.
70	243	" " 90T.
70	244	" " 81T.
71	242	Idler Gear 90T.
72	#6-32 x 5/8 lg.	Fill. Head Screw
73	608-23-329	Change Gear Sleeve Binder Nut
74	608-20-128	Change Gear Sleeve Binder
75	456	Change Gear Sleeve
76	815	Compound Gear 45T.
77	192	Centering Collar
78	122	Tumbler Shaft Bearing
79	#4-40 x 3/8 lg.	Fill. Head Screw
80	608-20-199	Compound Shaft Key Pin (2 req.
81	LY4-354	Gear Case Pin
82	608-20-826	Spacing Rod (2 req.)

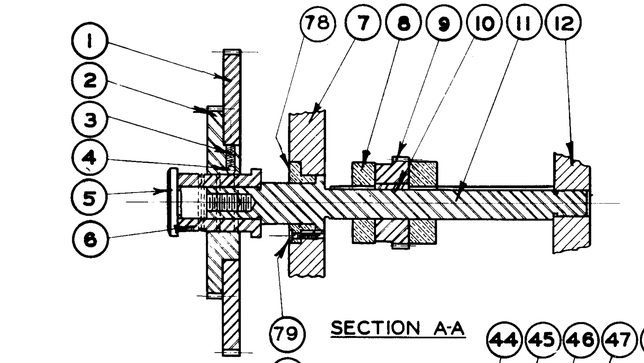

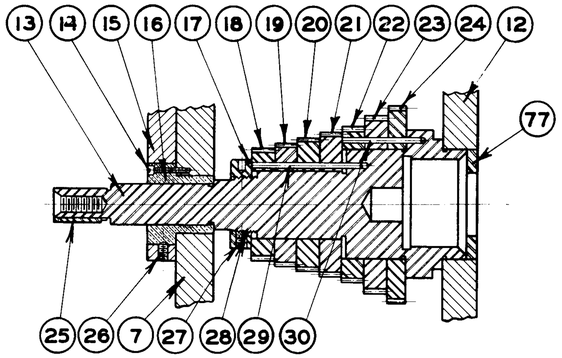

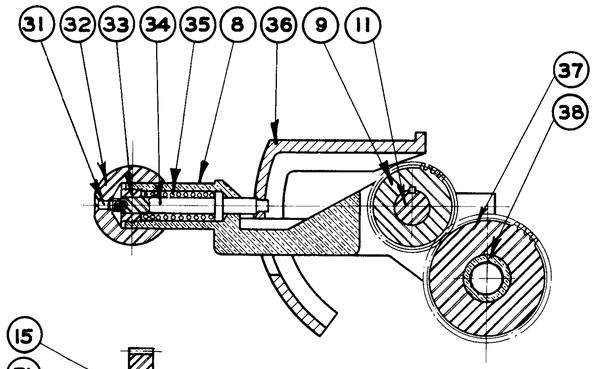

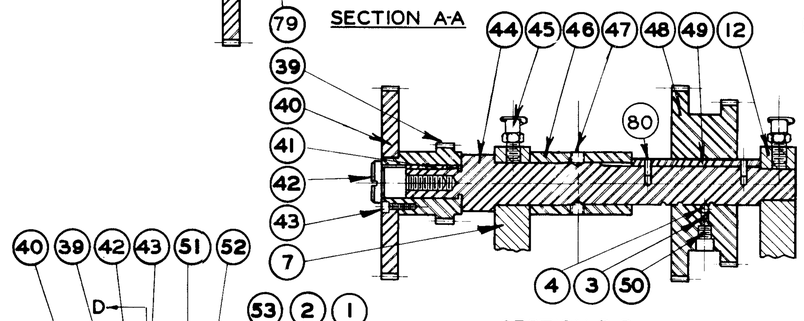

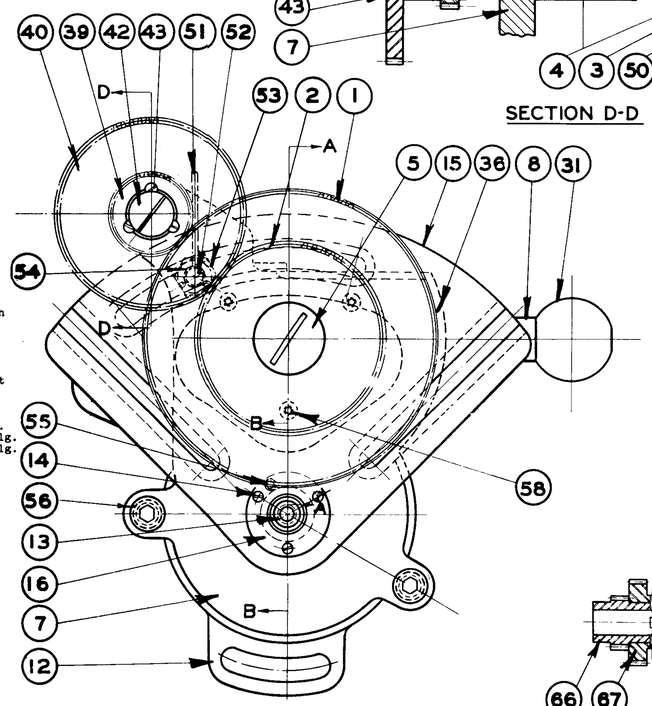

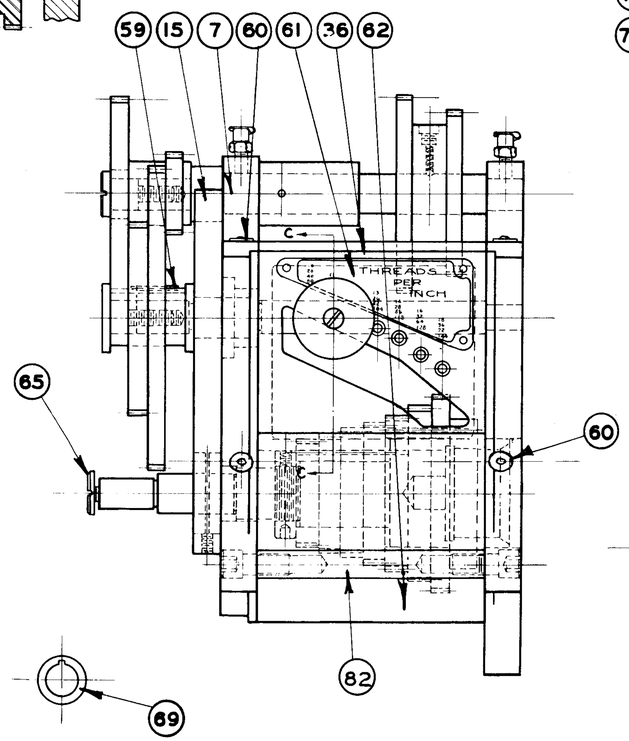

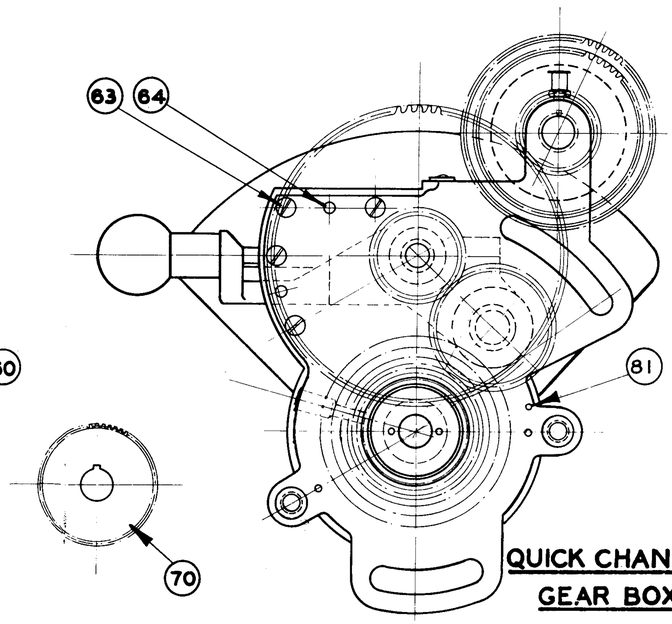

QUICK CHANGE GEAR BOX

RIVETT LATHE & GRINDER INC.
BOSTON, MASS.
Drawn by N.P.B. Date 3-10-43
Traced by N.P.B. Date 3-11-43
Checked by R.J.R. Scale FULL
608-20

WAS RLC 8

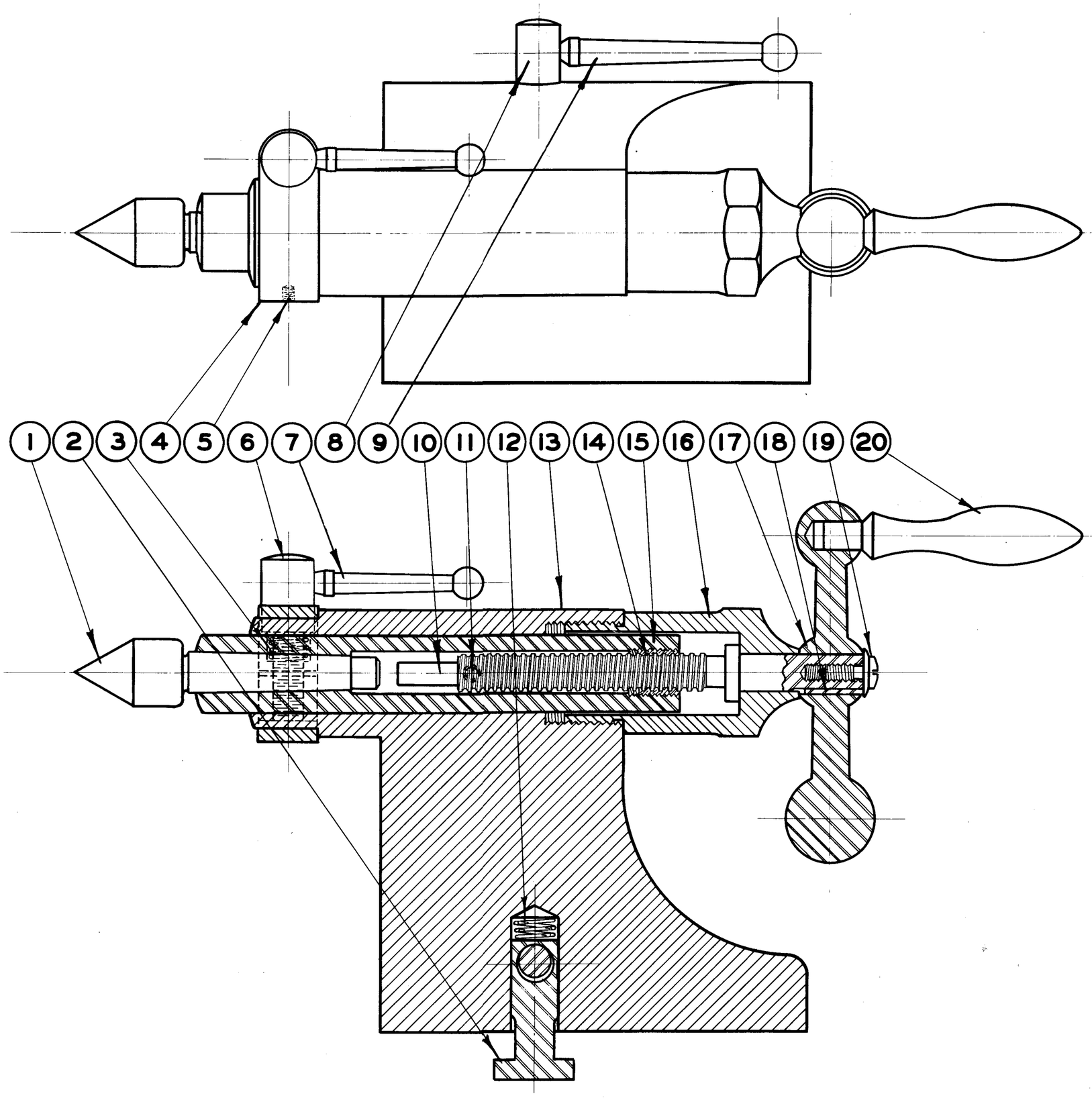

No.	Part No.	Part Name
1	506-22-723	Plain Center
2	608-22-499	Binder Stud
3	608-22-480	Tailstock Clamp Spring
4	608-22-192	Collar
5	#10-32 x 1/4	Headless Cone Point
6	608-22-640	Tailstock Clamp Screw
7	506-22-257	Clamp Screw Handle
8	608-22-129	Eccentric Binder
9	506-22-260	Eccentric Binder Handle
10	506-22-556	Tailstock Feed Screw
11	506-22-639	Spindle Guide Screw
12	608-22-481	Binder Stud Spring
13	608-22-510	Tailstock
14	506-22-151	Tailstock Spindle Bushing
15	507-22-466	Tailstock Spindle
16	608-22-324	Tailstock Nut
17	506-22-258	Feed Screw Ball Handle
18	506-22-287	Tailstock Feed Screw Key
19	506-22-637	Ball Handle Screw
20	506-22-259	Feed Screw Handle

TAILSTOCK STANDARD

RIVETT LATHE & GRINDER INC.
BOSTON MASS.

Drawn by C.J. Date 11-13-43
Traced by C.J. Date 11-15-43
Checked by Scale FULL

608-22

WAS RLC35

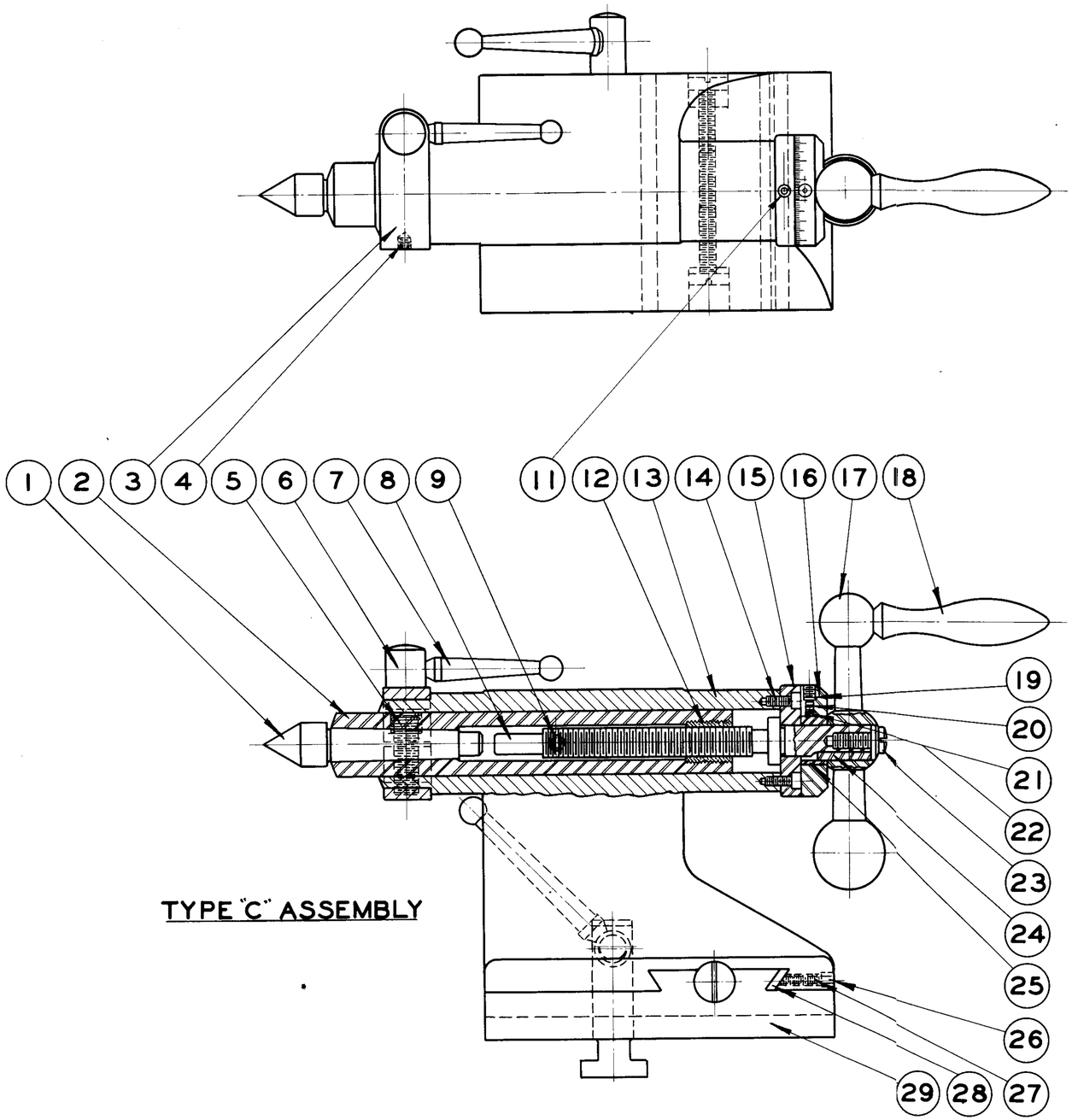

TYPE "C" ASSEMBLY

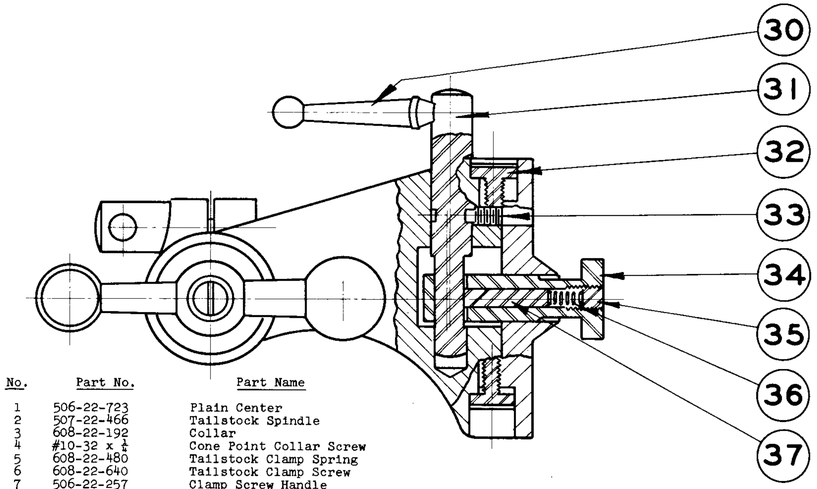

No.	Part No.	Part Name
1	506-22-723	Plain Center
2	507-22-466	Tailstock Spindle
3	608-22-192	Collar
4	#10-32 x ¼	Cone Point Collar Screw
5	608-22-480	Tailstock Clamp Spring
6	608-22-640	Tailstock Clamp Screw
7	506-22-257	Clamp Screw Handle
8	506-22-556	Tailstock Feed Screw
9	506-22-639	Spindle Guide Screw
10	608-22C-508A	Tailstock (Type D Assembly)
11	#56-00	Bowen Oil Cup
12	506-22-151	Spindle Nut
13	608-22C-508	Tailstock
14	#8-32 x 3/8	End Plate Screw
15	608-22C-374	End Plate
16	608-22C-193	Tailstock Dial
17	506-22-258	Feed Screw Ball Handle
18	506-22-259	Feed Screw Handle
19	#10-32 x 3/16	Allen Set Dial Screw
20	608-22C-666	Dial Spring
21	103-4B-511	Brass Tip
22	608-22C-511	Cork Tip
23	506-22-637	Ball Handle Screw
24	506-22-287	Feed Screw Key
25	608-22C-151	Bushing for Dial
26	506-9-354	Tailstock Gib Pin
27	608-22C-637	Tailstock Gib Screw
28	608-22C-245	Tailstock Gib
29	608-22C-115	Tailstock Base
30	506-22-260	Eccentric Binder Handle
31	608-22C-127	Eccentric Binder
32	608-22-637	Tailstock Adj. Screw
33	608-22-638	Eccentric Binder Ret. Screw
34	608-22-498	Binder Stud
35	5/16-18x7/16	Set Screw
36	507-5-478	Binder Stud Plunger Spring
37	608-22-655	Binder Stud Plunger
38	506-22-638	Clamp Screw (Type D Assembly)
39	506-22-257	Clamp Screw Handle

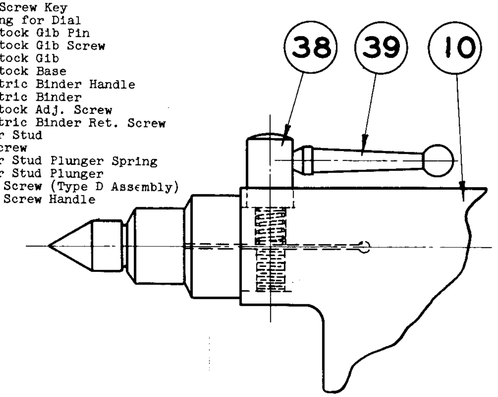

TYPE "D" ASSEMBLY

ADJUSTABLE TAILSTOCK

NEWETT LATHE & GRINDER INC.
BOSTON, MASS.
Drawn by W.E.C. Date 5-3-43
Traced by Date
Checked by Date

608-22C

WAS RLC-12

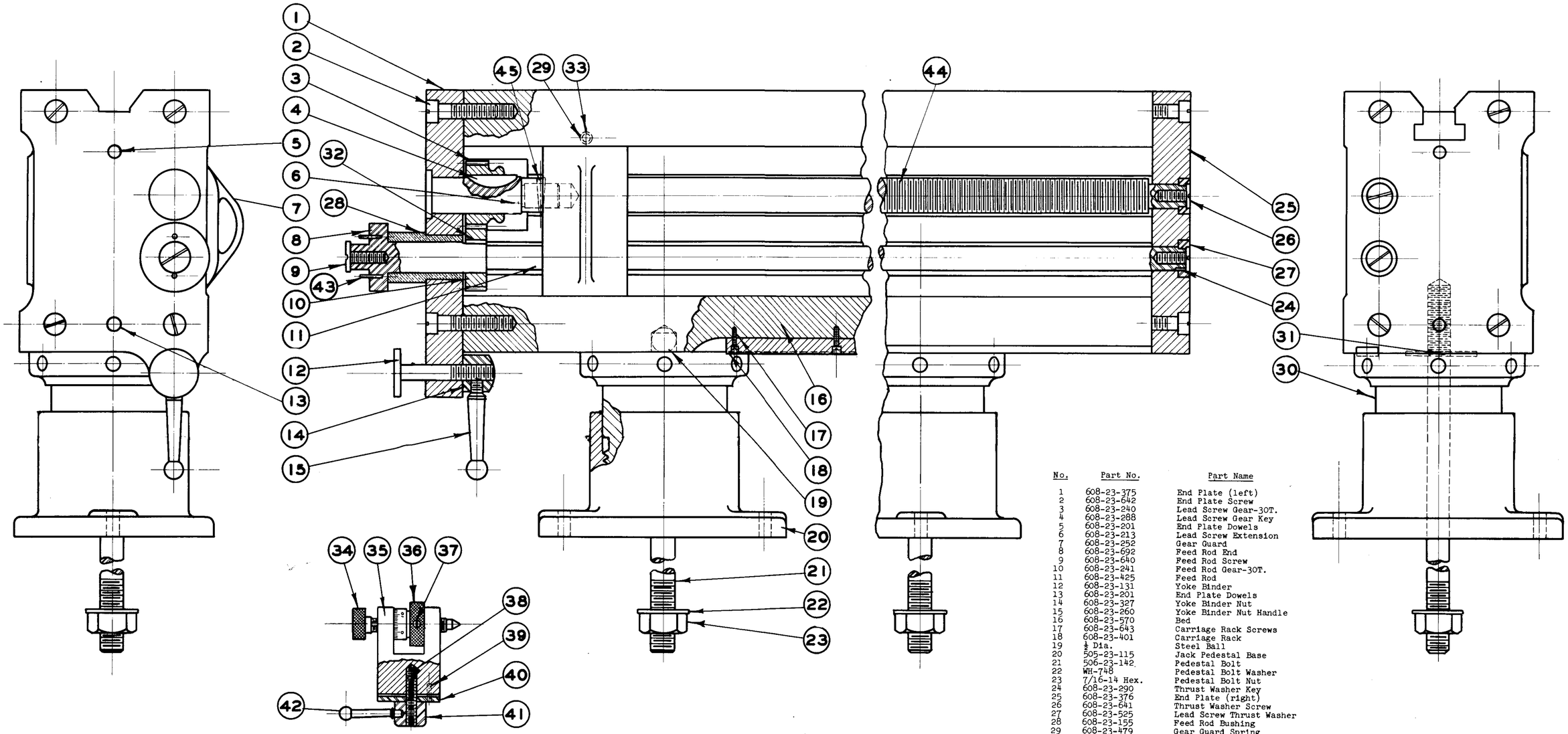

MICROMETER STOP

No.	Part No.	Part Name
1	608-23-375	End Plate (left)
2	608-23-642	End Plate Screw
3	608-23-240	Lead Screw Gear-30T.
4	608-23-288	Lead Screw Gear Key
5	608-23-201	End Plate Dowels
6	608-23-213	Lead Screw Extension
7	608-23-252	Gear Guard
8	608-23-692	Feed Rod End
9	608-23-640	Feed Rod Screw
10	608-23-241	Feed Rod Gear-30T.
11	608-23-425	Feed Rod
12	608-23-131	Yoke Binder
13	608-23-201	End Plate Dowels
14	608-23-327	Yoke Binder Nut
15	608-23-260	Yoke Binder Nut Handle
16	608-23-570	Bed
17	608-23-643	Carriage Rack Screws
18	608-23-401	Carriage Rack
19	½ Dia.	Steel Ball
20	505-23-115	Jack Pedestal Base
21	506-23-142	Pedestal Bolt
22	WH-748	Pedestal Bolt Washer
23	7/16-14 Hex.	Pedestal Bolt Nut
24	608-23-290	Thrust Washer Key
25	608-23-376	End Plate (right)
26	608-23-641	Thrust Washer Screw
27	608-23-525	Lead Screw Thrust Washer
28	608-23-155	Feed Rod Bushing
29	608-23-479	Gear Guard Spring
30	505-23-270	Jack Pedestal Head
31	608-23-521	Pedestal Washer
32	608-23-291	Feed Rod Gear Key
33	3/16" Dia.	Friction Ball for Guard
34	608-23-650A	Stop Bracket Screw
35	608-23-145A	Stop Bracket
36	608-23-193A	Stop Bracket Dial
37	608-23-651A	Stop Bracket Screw Key
38	608-23-639	Binding Screw
39	608-23-202	Bracket Plate Dowel
40	608-23-377A	Bracket Plate
41	608-23-328	Binding Screw Nut
42	506-9-259	Binding Nut Handle
43	608-23-355	Dowel Pin for Gears
44	608-23-637	Lead Screw
45	#1 x 3/4 lg.	Taper Pin

BED

JACK PEDESTALS
MICRO. STOP

SMITH LATHE & GRINDER INC.
BOSTON, MASS.
Drawn by G. DER H. Date 5/3/43
Traced by Date
Checked by Scale FULL
608-23

WAS RLC-14

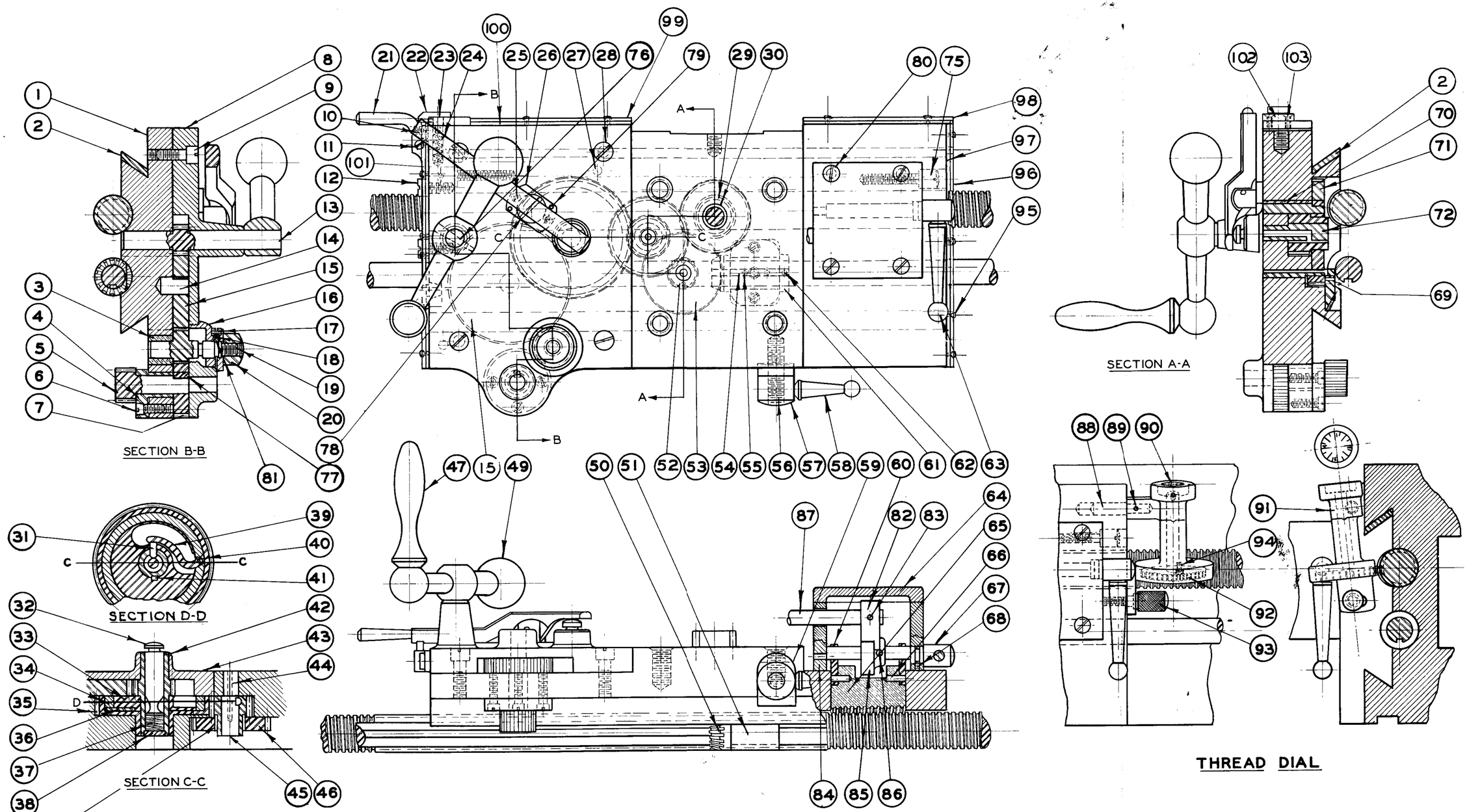

No.	Part No.	Part Name
1	608-26-173	Carriage
2	245	Carriage Gib
3	120	Int. Rack Gear Bearing
4	117	Rack Gear Bearing
5	230	Rack Gear (12T.)
6	8-36 x 1/2	Bearing Screw (3 req.)
7	229	Rack Gear Intermediate (30T.)
8	374	Carriage Plate
9	640	Plate Screw (4 req.)
10	644	Stop Screw Binding Screw
11	643	Friction Lever Stop Screw
12	638	Automatic Stop Lever Screw (2 req.)
13	226	Hand Feed Gear (12T.)
14	497	Gear Stud
15	227	Hand Feed Gear (57T.)
16	119	Bearing for Rack Gear
17	650	Spring Retaining Screw
18	666	Rack Gear Bearing Spring
19	228	Intermediate Rack Gear (18T.)
20	679	Intermediate Rack Gear Nut
21	302	Friction Lever
22	303	Automatic Stop Lever
23	656	Automatic Lever Plunger
24	481	Automatic Lever Spring (2 req.)
25	645	Lever Base Screw (2 req.)
26	115	Friction Lever Base
27	106-20-355	Plate Dowel Pin
28	608-26-640	Plate Screw (4 req.)
29	236	Cross Feed Gear (18T.)
30	499	Cross Feed Gear Bushing
31	359	Plunger Pin
32	655	Friction Plunger
33	653	Friction Disc
34	419	Friction Ring
35	231	Friction Gear (56T.)
36	670	Friction Ring Key
37	480	Friction Spring
38	380	Gear Plug
39	479	Friction Disc Spring
40	358	Spring Pin
41	288	Friction Gear Key
42	232	Friction Ring Gear (16T.)
43	374	Carriage Plate
44	498	Intermediate Gear Stud
45	233	Intermediate Gear (18T.)
46	234A	Comp. with Intermediate Gear (36T.)
47	258	Handle
48		
49	257	Hand Feed Ball Handle
50	239	Pinion (21T.)
51	118	Pinion Gear Bearing
52	237A	Bevel Gear (12T.)
53	238	Bevel Gear (48T.)
54	289	Bearing Key
55	361	Bearing Key Pin (2 req.)
56	608-26-142	Carriage Clamp Stud
57	325	Carriage Clamp Stud Nut
58	261	Clamp Stud Nut Handle
59	378	Carriage Clamp
60	312	Nut Links (2 req.)
61	188	Pinion Collar
62	364	Pinion Collar Pin (2 req.)
63	259	Nut Ecc. Shaft Handle
64	377	Cover Plate
65	324A	Lead Screw Nut
66	60-364	Nut Link Pin (2 req.)
67	608-26-437	Nut Ecc. Shaft
68	649	Nut Ecc. Shaft Screw
69	364	Pin (2 req.)
70	499	Cross Feed Gear Bushing
71	235A	Cross Feed Gear (33T.)
72	500	Bevel Gear Stud
73	364	Pin (2 req.)
75	639	Carriage Gib Screws (2 req.)
76	#000 x 1 lg.	Taper Pin
77	608-26-291	Gear Key
78	#000 x 3/4 lg.	Taper Pin
79	608-26-357	Base Pin (2 req.)
80	10-32 x 1 3/4 lg.	Nut Cover Screws (4 req.)
81	1/8 dia.	Out Bearing Locking Ball
82	608-26-206	Locking Dog
83	#000 x 7/8 lg.	Taper Pin
84	608-26-182	Lead Screw Nut Cover
85	654	Locking Disc
86	10-32 x 5/8 lg.	Set Screw (2 req.)
87	608-26-438	Interlocking Shaft
88	LVK-354	Bracket Pin
89	355	Bracket Pin Retaining Pin
90	194 or	Metric Dial
	193	English Dial
91	145	Bracket
92	812 or	Metric Worm Gear
	811	English Worm Gear
93	637	Locating Screw
94	#4-40 x 5/8 lg.	Screw
95	608-26-945	Wiper Retaining Plate Screw (16 req.)
96	177	Wiper Clamp (R.H.)
97	744	Carriage Wiper Blank
98	744	Wiper Clamp-Short
99	179	Wiper Clamp-Long
100	742	Carriage Wiper Blank
101	178	Wiper Clamp (L.H.)
102	252	Guard
103	#4-40 x 5/8 lg.	Flat Head Screws (2 req.)

CARRIAGE

BARRETT LATHE & GRINDER INC.
BOSTON, MASS.
Drawn by W.F.T. Date 5-3-43
Traced by ____ Date ____
Checked by ____ Date ____

608-26

No.	Part No.	Part Name
1	608-26-675	Binder Stud
2	608-26-641	Lever Stop Screw
3	608-26-261	Lever Handle
4	8-32x3/8 Fil.	End Plate Screw
5	608-26-375	End Plate
6	608-26-363	Lever Stop Pin
7	608-26-304	Bearing Block Lcc. Lever
8	608-26-155	Guard Bushing
9	608-26-251	Cross Feed Gear Guard
10	608-26-262	Guard Handle
11	608-26-133	Bearing Block
12	608-26-242	Cross Inter Gear 33 T
13	608-26-677	Carriage Angle
14	608-26-243	Cross Feed Gear 22 T
15	103-17-287	Gear Key
16	608-26-482	Block Spring
17	608-26-181	Bearing Block Cover
18	1/8-40 x 1/4	Bearing Block Spring Screw
19	608-26-244	Cross Feed Gear
20	608-26-260	Binder Handle
21	608-26-642	Pivot Screw
22	608-26-127	Binder
23	608-26-637	Binder Stud Spring Screw
24	608-26-667	Binder Stud Spring
25	3/8-16x1-1/2	Angle Screw
26	3/8-16 x 1	Angle Screw
27	608-26-437	Cross Inter Gear Stud
28	LJ3¼-354	End Plate Dowel
29	8-36 x 1/8"	Bearing Block Cover Oil Scr.
30	608-26-220	Locking Fork
31	608-26-261A	Interlocking Handle
32	#10-32	Set Screw
33	608-26-438	Interlocking Shaft
34	608-26-379	Lead Screw Nut Cover Plug
35	608-26-376	Carriage Angle End Plate Rear
36	#10-32 x 5/8	Fil. Head Screw
37	#10-32 x 5/16	headless Slotted Cup Pointed Scr.
38	608-26-246	Rear End Plate Gib
39	506-9-354	Gib Dowel Pin
40	#56-00	Bowen Oil Cup (3)
41	608-26-334	Carriage Angle Wiper

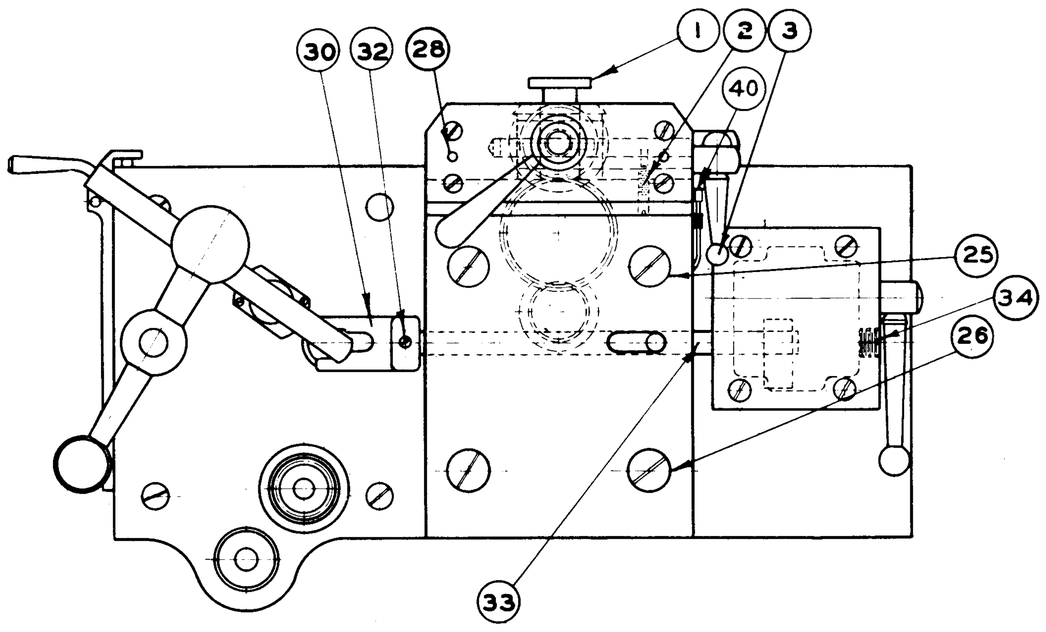

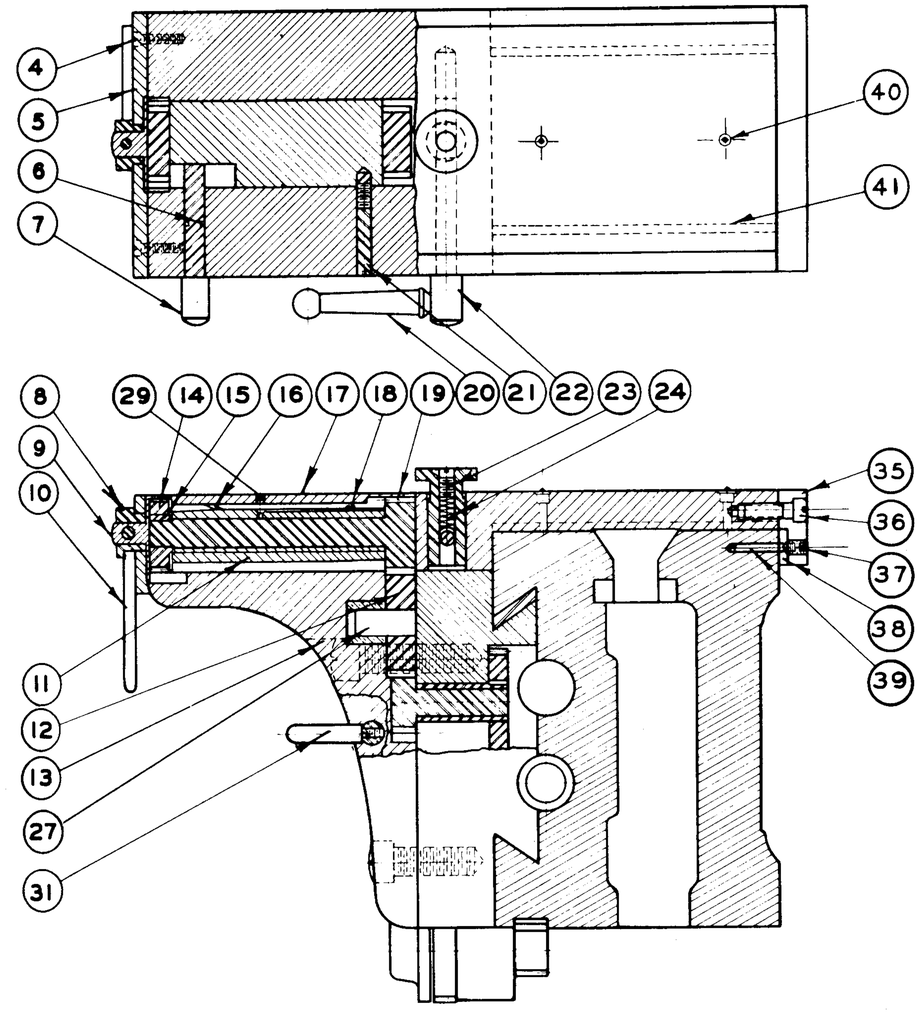

CARRIAGE ANGLE

RIVETT LATHE & GRINDER INC
BOSTON, MASS.
Drawn by ..... Date .....
Traced by ..... Date .....
Checked by ..... Scale .....

608-26A

WORTHINGTON

MECHANICAL POWER TRANSMISSION SALES DEPT.

OIL CITY, PA.

1600-E3A

SEPTEMBER 15, 1956

SUPERSEDES

AS1600-E2 & E3

APRIL, 1954

AND MPT-F137

JAN. 3, 1956

ALL SPEED DRIVE MODEL A

THESE INSTRUCTIONS APPLY ONLY TO MACHINES WITH SERIAL NUMBERS BEGINNING WITH THE PREFIX 3A

INSTRUCTIONS

FOR INSTALLATION, OPERATION AND LUBRICATION

INSTALLATION

IN INSTALLING THE WORTHINGTON ALL-SPEED DRIVE, CARE SHOULD BE USED AND THE FOLLOWING INSTRUCTIONS ADHERED TO.

1. When the machine is uncrated, the crate and unit should be checked for damage due to shipment so that any damage may be reported to the carrier.

2. Mount the machine on its foundation making sure that the base is level and supported at all bolt locations. Shim if necessary.

3. Check all shafts and make sure they all rotate freely. This should be checked after drive is bolted in postion to make sure that there is no misalignment.

4. The input and output shaft of the variable drive can be connected by V-Belts, flat belts, chain, gears, or flexible coupling. The alignment of these connections should be carefully checked.

5. Lubricate the grease fittings using a light cup grease and a hand gun. See Lubrication instructions.

6. After checking the electrical connections start the unit up and shift it through its entire range about 4 or 5 times to insure the spreading of the lubricant on the sliding fits.

OPERATING

1. To insure best operation, shift the drive through the entire speed range once each day if possible. This spreads the lubricant on the sliding fits and keeps the shiftable flanges from sticking.

2. The drive should be protected from abrasive dirt, water, oil and acids getting onto the sheave faces and belts to obtain the maximum belt life.

3. The belt tension should be checked after the first day of operation or after new belts have been installed. See belt tension instructions.

4. After the initial stretch and set of the belts has been taken, it is only necessary to check the tension every 400 hours when lubricating the drive.

Printed in U. S. A.

LUBRICATION -- REFER TO FIGURE 1

There are three primary rotating shafts in the Allspeed machine each of which should be greased as indicated below. Worthington recommends the use of a light cup grease.

Lubricate following points every 200 hours of operation.

1. JACKSHAFT - Fitting #7 (located between center two flanges). Make sure the gun is purged of air and actually pumping grease. Stroke the handle enough to force out a thimble full of lubricant. This is the amount that should be injected.

2. INPUT SHAFT - Fitting #8. Start the machine and shift it to maximum output speed. Stop machine and inject grease until it overflows out of the inner end of the shaft into the open shifting spacer #2.

3. OUTPUT SHAFT - Fitting #9. Start machine again and shift it to its lowest speed. Repeat greasing as above.

NOTE that the machine must be shifted to its extreme speeds as indicated in order to prevent grease pressure from blowing out the bushings that are fitted into the shifting flanges. Also note that the grease should be injected slowly so as to prevent excessive pressure build-up.

While the machine is shut down, it is also desirable to place a few drops of oil on the sliding fits #10 and #11 where the cam bar moves up and down on the main frame. Handwheel linkage #12 should be oiled lightly.

The ball bearings in these Drives are shielded, life-lubricated ball bearings and no attempt should be made to lubricate or clean out these bearings.

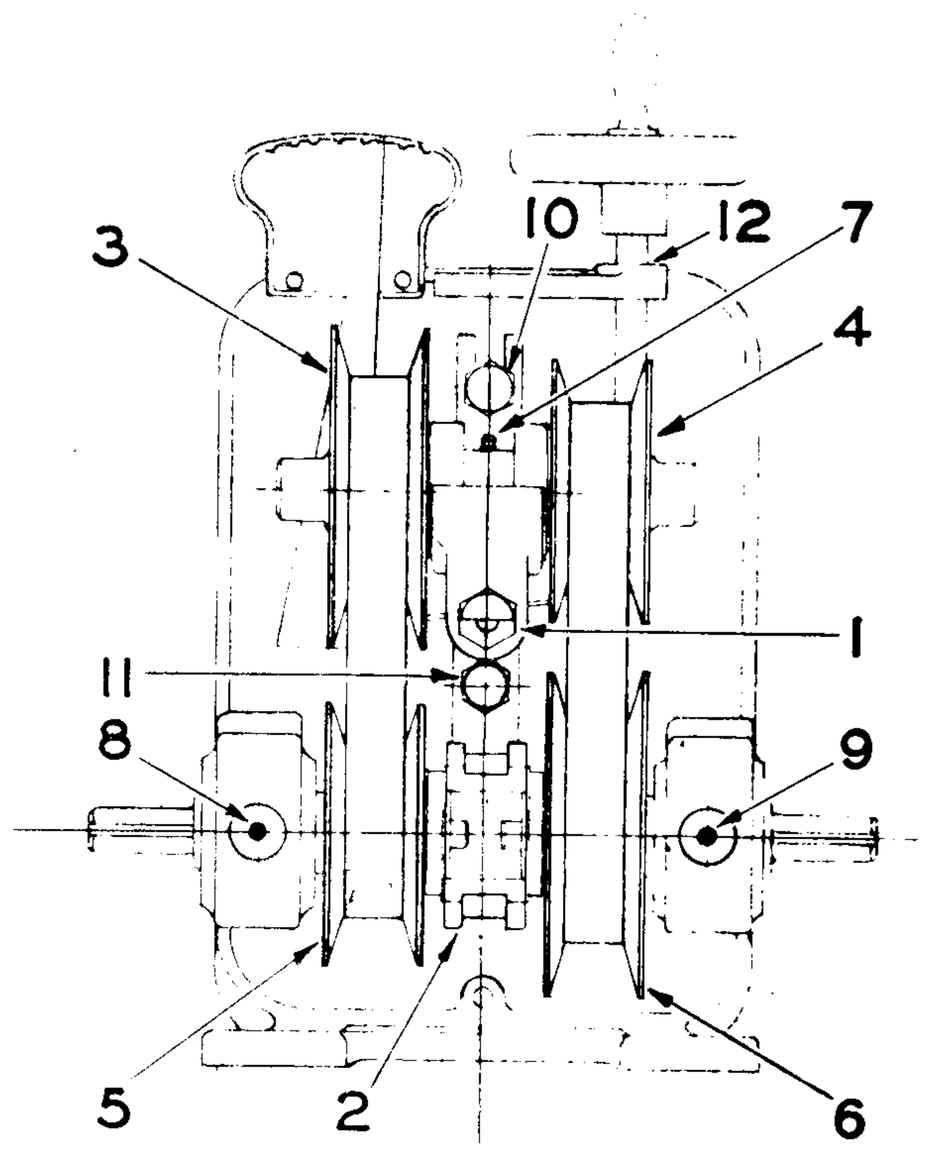

Figure 1

BELT MAINTENANCE

Both belts can be removed from the machine without disconnecting either the input or output shaft. Place drive in low speed position. Loosen and remove belt tensioning gland #1. This will remove all tension from belts by allowing jackshaft housing to drop to lowered position. With tension removed from belts, remove shifting spacer #2, from in between input and output shafts.

Remove output and input belts from jackshaft flanges, #3 and #4. The Jackshaft assembly may be bumped free of housing and tilted so that input and output belts can be easily removed. Remove belts from input and output flanges, #5 and #6. Pass belts through center of machine between ends of the input and output shafts. Reverse this process to install belts. Tighten belts as indicated in belt tension instructions.

BELT TENSION -- REFER TO FIGURE 2

The belt tension indicator #1 should be checked after the first day of operation after new belts have been installed and once every 400 hours thereafter. Tension is correctly adjusted by setting the machine for maximum output speed and tightening the belt tension gland until the indicator rod is just touching the end of the hole in the gland as illustrated. When this point is reached, the gland becomes a little harder to turn. DO NOT TIGHTEN BEYOND THIS POINT! The belt will be too tight if you do!

Need for additional tension is clearly seen when the indicator rod is found not touching the end of the hole.

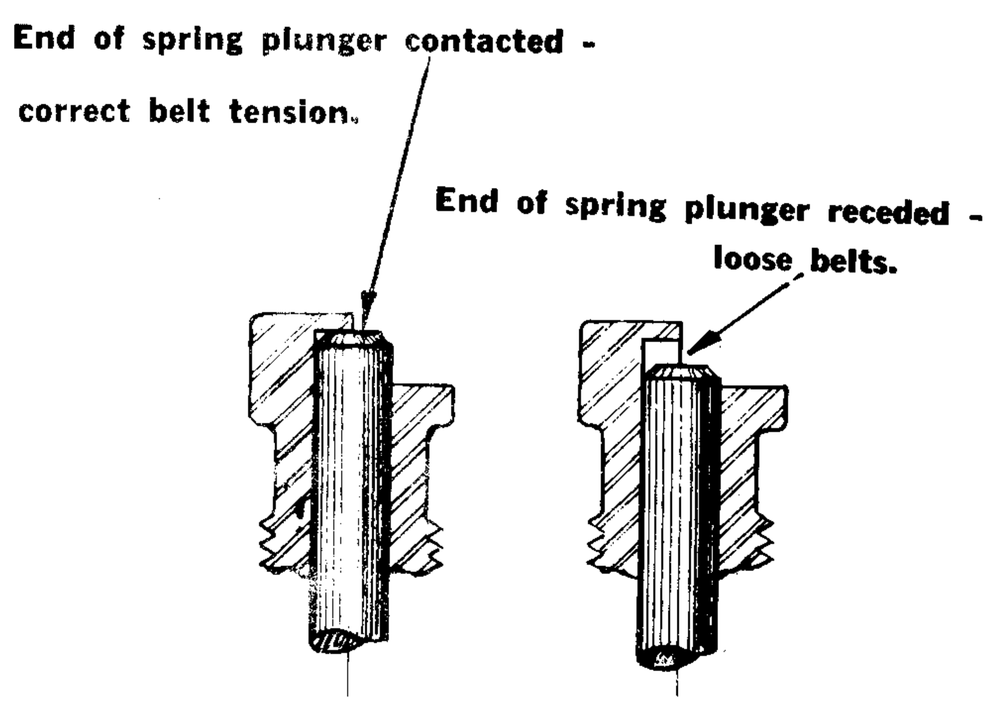

Figure 2

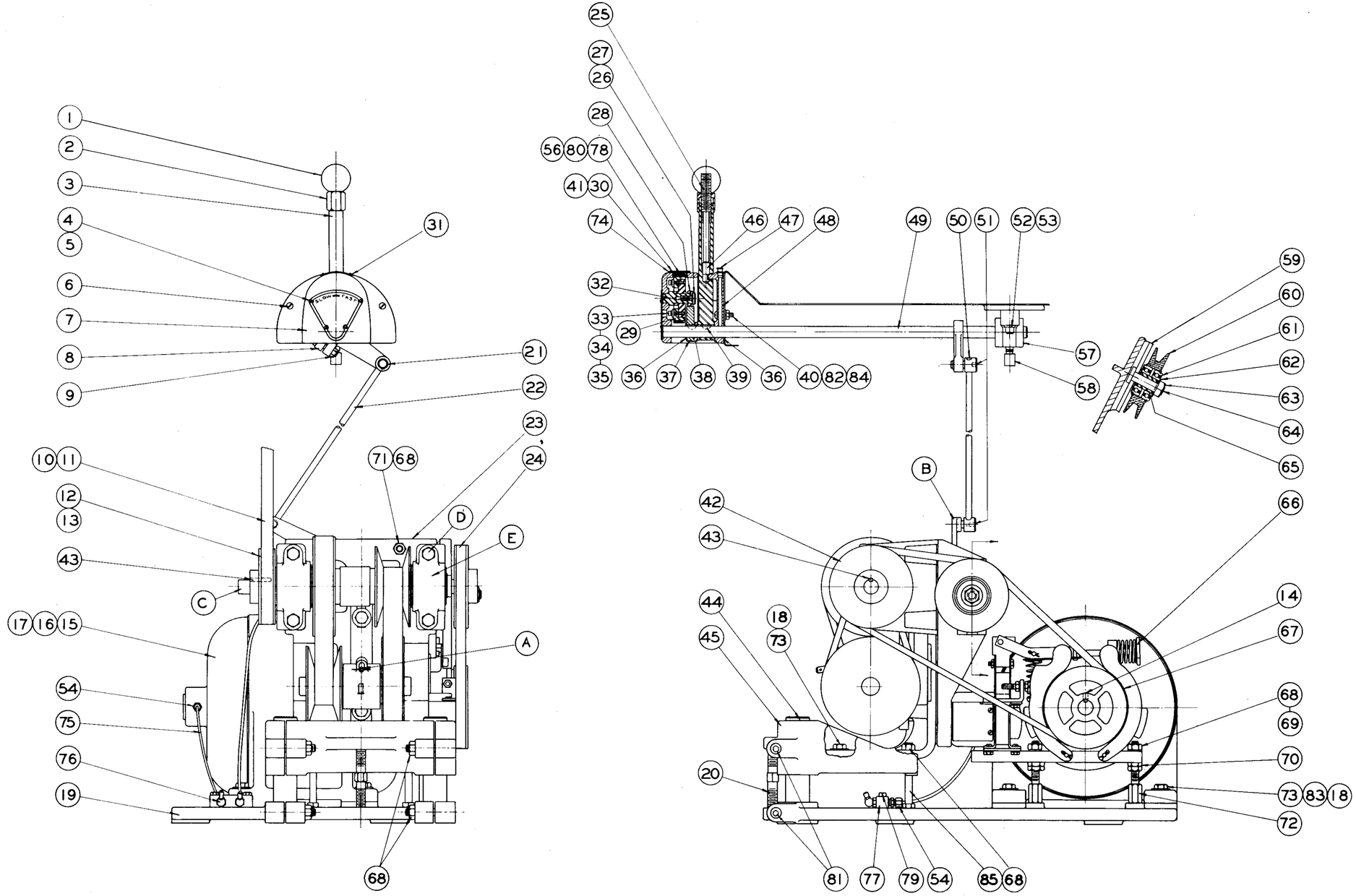

B	REMOVED PT. 55	9-13-56	G
A	REVISED	2-19-46	G

RIVETT LATHE & GRINDER, INC.
BRIGHTON, BOSTON, MASS., U.S.A.

WORTHINGTON DRIVE

RWG. 12-1-49
RVG. 2-26-59 KG. HALF SIZE

918S-16W

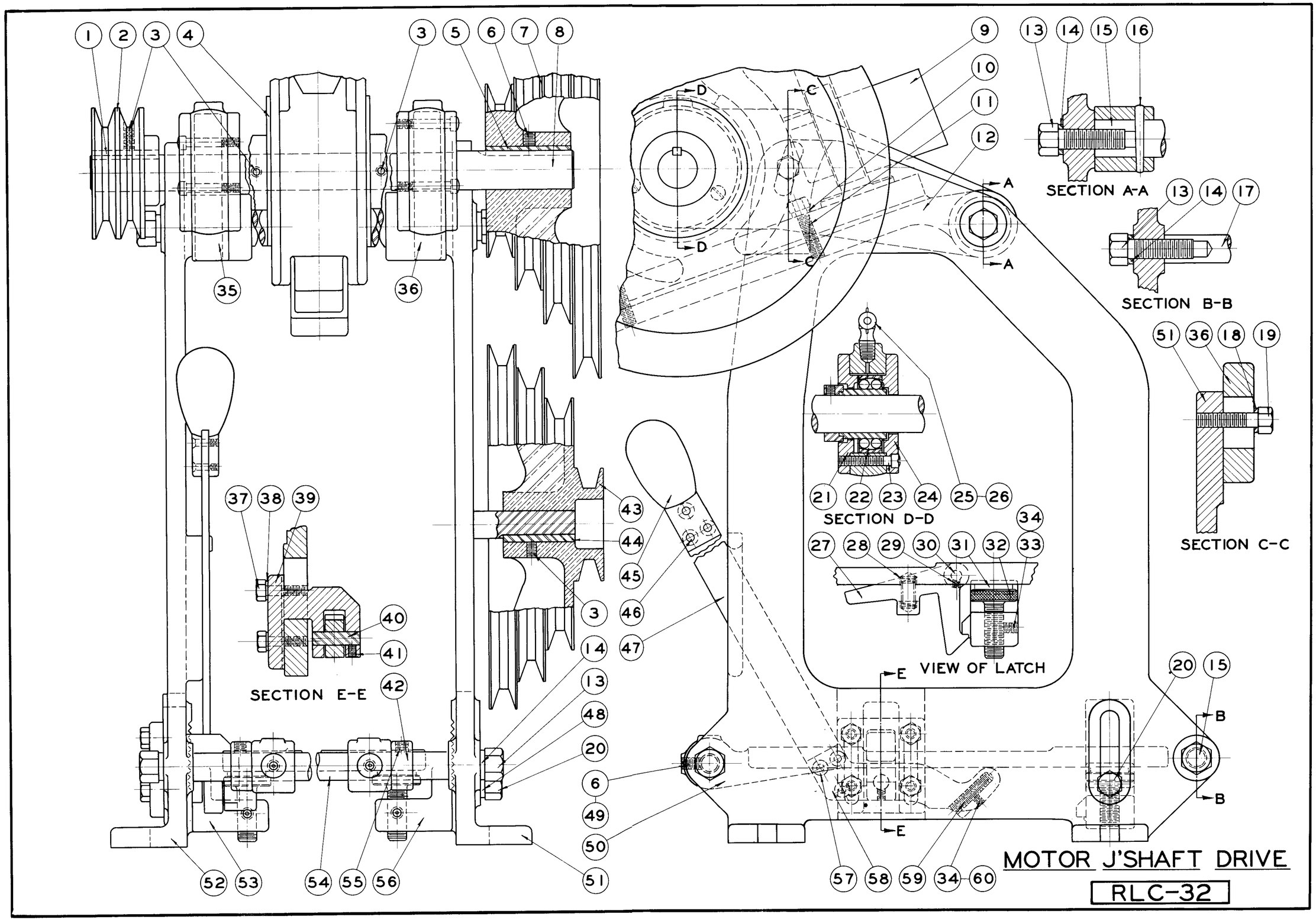
SECTION A-A
SECTION B-B
SECTION C-C
SECTION D-D
SECTION E-E
VIEW OF LATCH
MOTOR J'SHAFT DRIVE
RLC-32

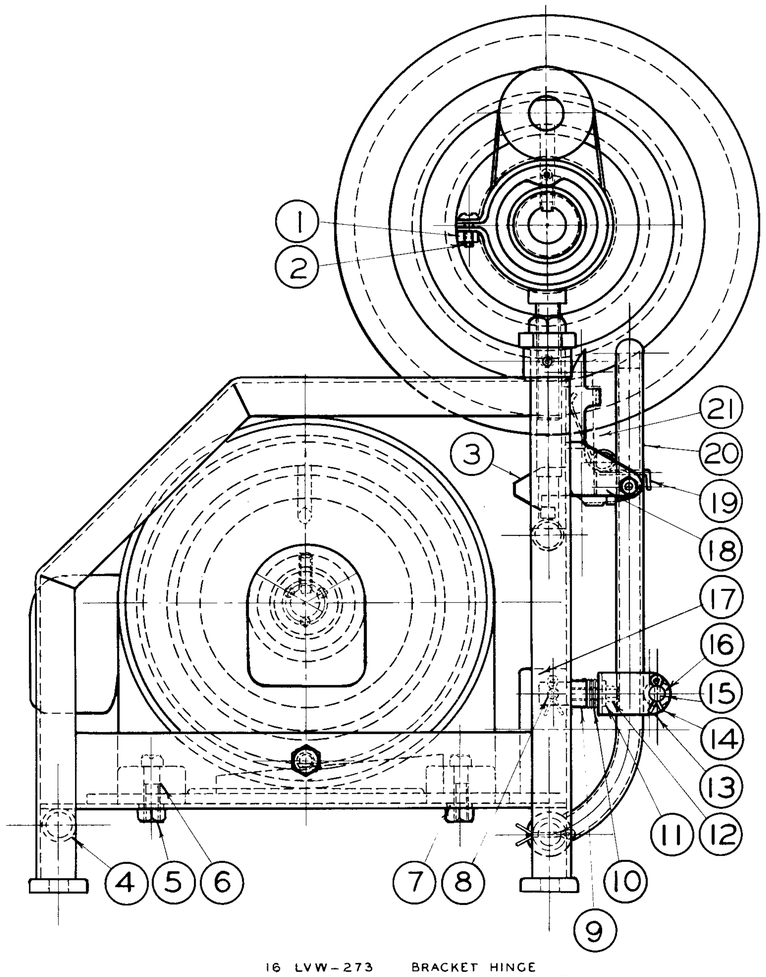

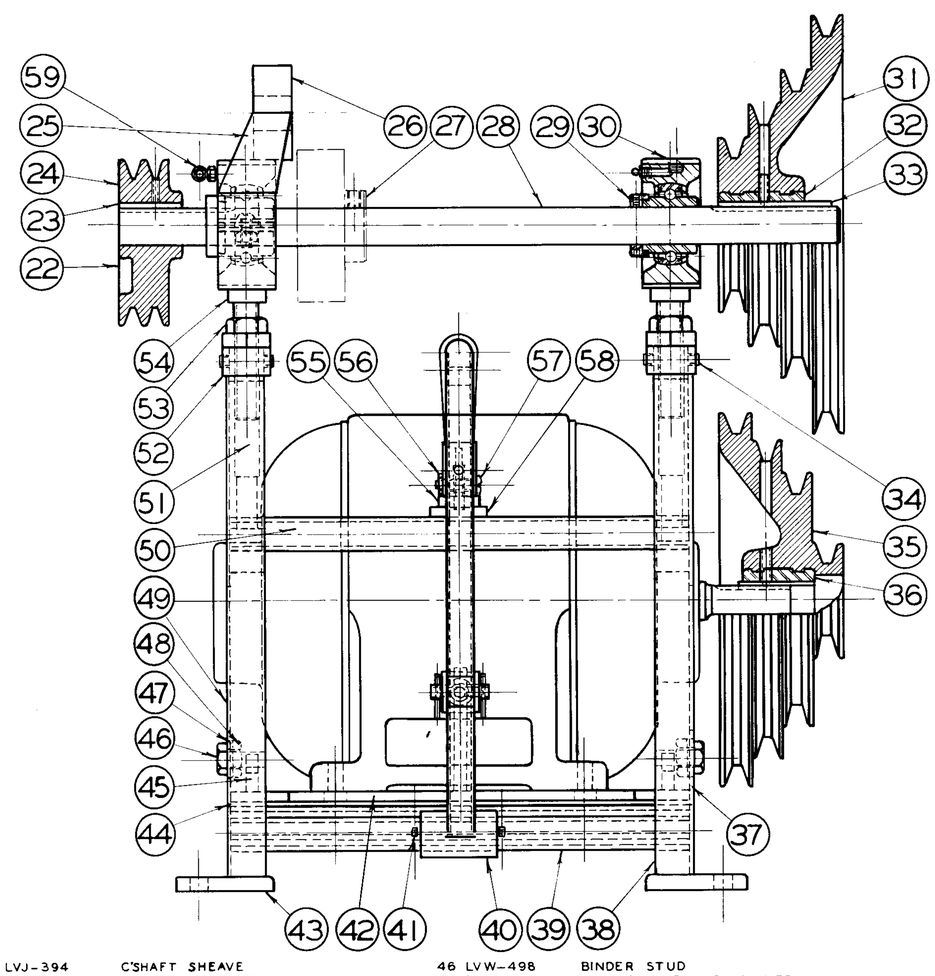

1	1/4-20N.C.	HEX NUT
2	1/4-20N.C.×3/4LG.	ROUND HEAD CAP SCREW
3	LVW-206	LEVER DOG
4	LVW-491	STRUT
5	3/8-16N.C.	HEX NUT
6	3/8-16N.C.×1-1/2LG.	HEX CAP SCREW
7	3/8 HOLE	LOCK WASHER
8	LVW-354	COUPLING PIN
9	LVW-184	COUPLING
10	LVW-667	BELLVILLE SPRING
11	LVW-521	COUPLING SCREW WASHER
12	5/16-18×1-1/4LG.	HEX HEAD CAP SCREW
13	LVW-147	BRACKET
14	1/8 DIA.×7/8LG.	COTTER PIN
15	LVW-355	BRACKET HINGE PIN
16	LVW-273	BRACKET HINGE
17	LVW-148	COUPLING BRACKET
18	LVW-272	HINGE
19	LVW-666	LEVER LOCKING SPRING
20	LVW-302	BELT ADJ. LEVER
21	LVW-257	LEVER RELEASE HANDLE
22	LVJ-388	C SHAFT DRIVE SHEAVE HIGH RANGE
23	LVJ-289	KEY
24	LVJ-386	C SHAFT DRIVE SHEAVE LOW RANGE
25	LVW-568	BRAKE MOUNTING SUPPORT
26	LVW-409	BRAKE RETAINER
27	LVW-208	BRAKE DRUM
28	LVW-437	COUNTERSHAFT
29	LG-1" FAFNIR	CARTRIDGE TYPE BALL BRGS
30	LVW-410	SHAFT RETAINER
31	LVJ-394	C'SHAFT SHEAVE
32	LVJ-151	STEEL BUSHING FOR C'SHAFT SHEAVE
33	LVJ-287	KEY
34	1/4-20N.C.×1/4LG.	ALLEN HEADLESS SET SCREW
35	LVJ-395	MOTOR SHEAVE
36	LVJ-152	STEEL BUSHING FOR MOTOR SHEAVE
37	LVW-486	RIGHT HAND STRAP
38	LVW-146	RIGHT HAND BRACKET
39	LVW-492	STRUT
40	LVW-272	LEVER HINGE
41	1/8DIA.×1-1/2LG.	COTTER PIN
42	LVW-374	MOTOR PLATE
43	LVW-316	MOUNTING LUG
44	LVW-485	LEFT HAND STRAP
45	LVW-747	BINDING WEDGE
46	LVW-498	BINDER STUD
47	1/2 HOLE DIA.	SHAKEPROOF LOCKWASHER
48	LVW-325	BINDER STUD NUT
49	LVW-145	LEFT HAND BRACKET
50	LVW-491	STRUT
51	LVW-411	STUD RETAINER
52	LVW-324	SHAFT MOUNTING NUT
53	LVW-326	LOCK NUT
54	LVW-497	SHAFT MOUNTING STUD
55	LVW-134	LEVER RELEASE STOP BLOCK
56	10-32N.F	HEX NUT
57	10-32N.F.×1-1/8LG.	ROUND HD. MACHINE SCR.
58	LVW-317	LEVER HOLDING LUG
59	NO. 1911-1/8	ALEMITE FITTING BARNUM AND STONE

MOTOR JACKSHAFT DRIVE

G. DER H. 1/5/43
G. DER H. 1/13/43
LVW

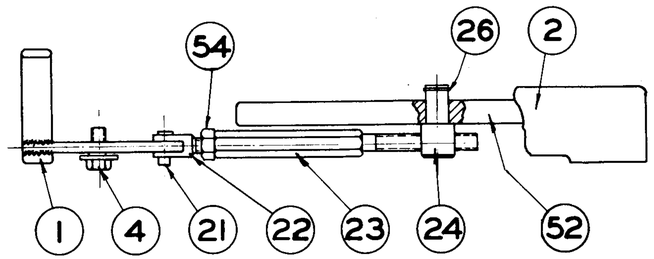

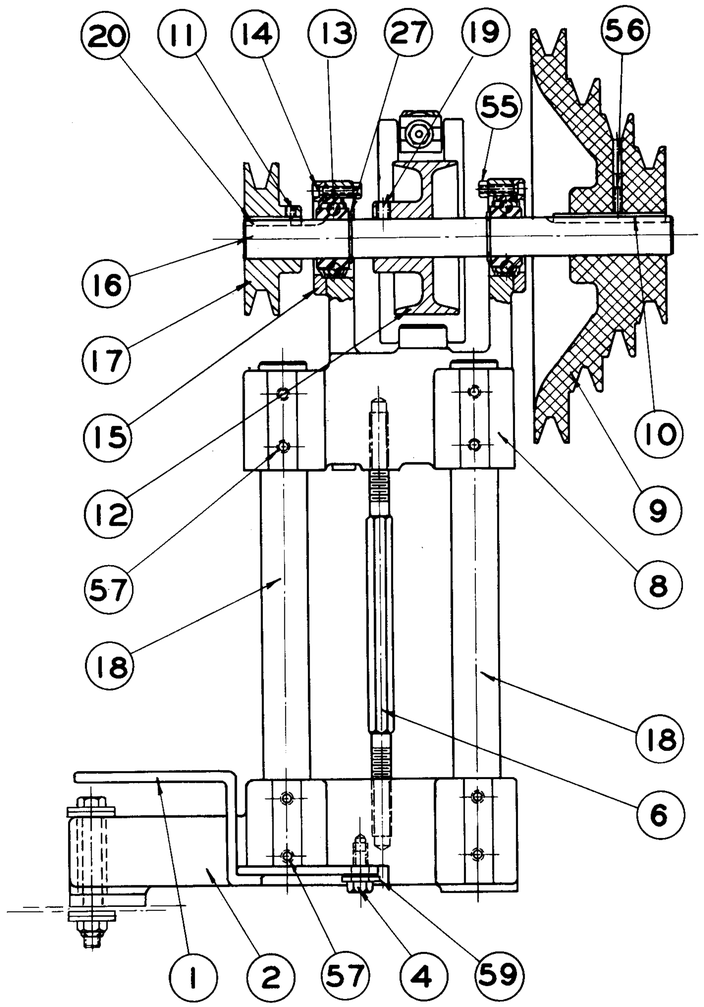

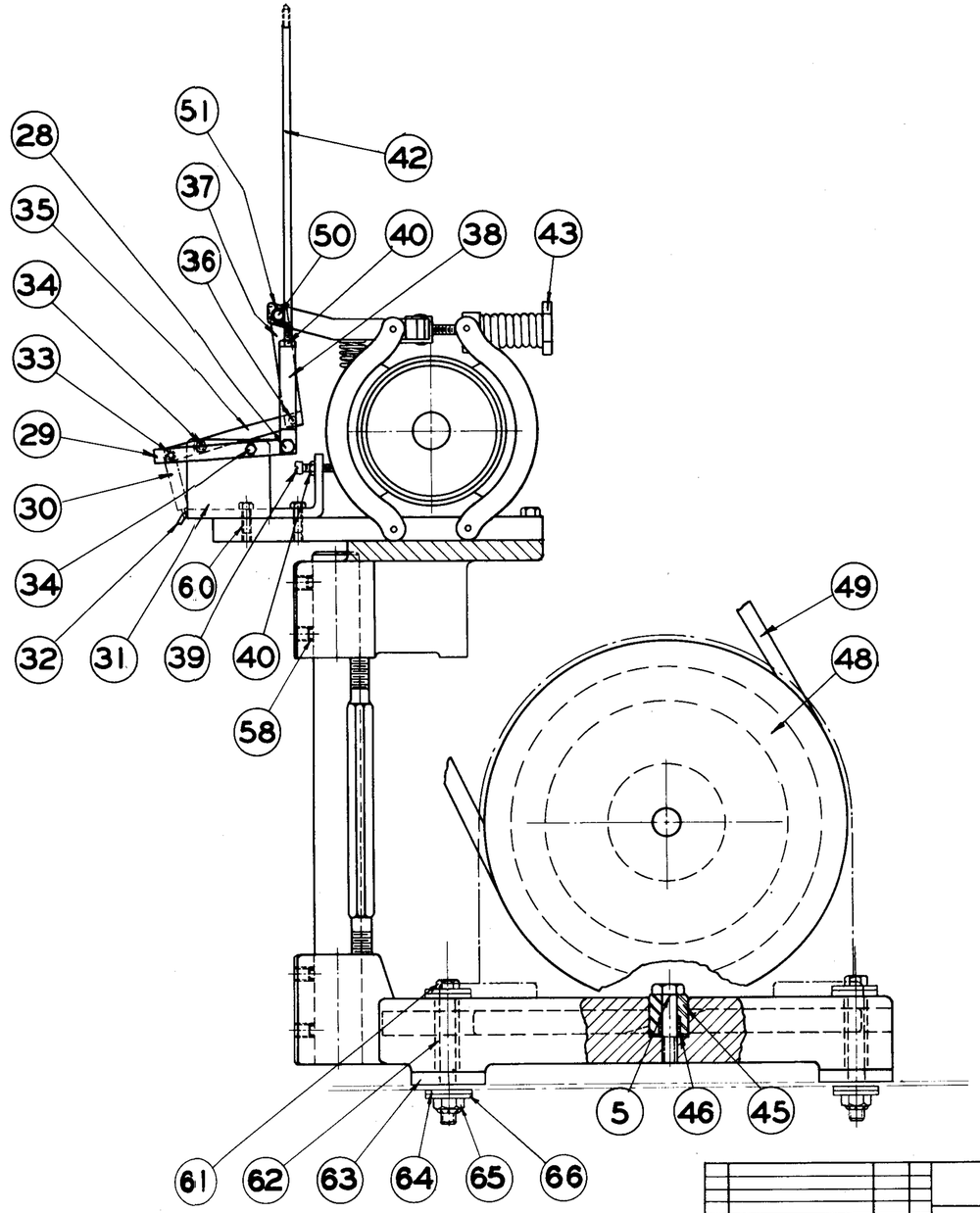

ADDED #61 & 66	1-19-52	
REVISED	1-19-51	

RIVETT LATHE & GRINDER, INC.
BRIGHTON, BOSTON, MASS., U.S.A.

MOTOR J'SHAFT DRIVE

G.E.C. 10-26-46
E.T.G. 12-29-48 HAEF

918R-16

WAS RLC 9

No.	Part No.	Part Name.
1	506-22-639	Guide Screw
2	LRQ-20B-447	Brake Rod
3	LRQ-20B-206	Brake Dog
4	LRQ-201-992	Box Gasket
5	¼-20x5/8"Lg.	Oil Lip Scr.(2)
6	LRQ-201-991	Bench Gasket
7	¼-20x1-1/8"Lg.	Yoke Scr. (2)
8	LRQ-20-503	Plate Swivel
9	LRQ-20-127	Shaft Binder
10	¼-20 x 5/16	Set Screw
11	5/16-18x½" Lg.	Set Screw
12	LRQ-20-904	Stud
13	LRQ-20-115	Motor Plate
13	LRQ-20-116	Motor Plate (Dual Plate)
14	1/2-13	Check Nut (2)
15	3/4 N.P.T.	Pipe Plug
16	#2 P & W	Taper Pin (2)
17	LRQ-20-140	Gear Box
18	LRQ-201-118	Shaft Collar
19	LRQ-20-427	Roller
20	3/8 I.Dx 1/16	Lock Washer
21	3/8-16	Stud Nut
22	LRQ-20-498	Roller Stud
23	Timken	Roller Br'gs.
24	LRQ-201-543A	Br'g. Cup (Closed)
25	LRQ-20-112	Treadle Arm
26	LRQ-20-439	Clutch Shaft
27	3/8-16x½" Lg.	Set Screw
28	¼-20x3/16" Lg.	Set Screw
29	LRQ-20-110	Clutch Oper. Arm
30	LRQ-20-374	Clutch Adj. Plate
31	LRQ-201-993	Plate Gasket

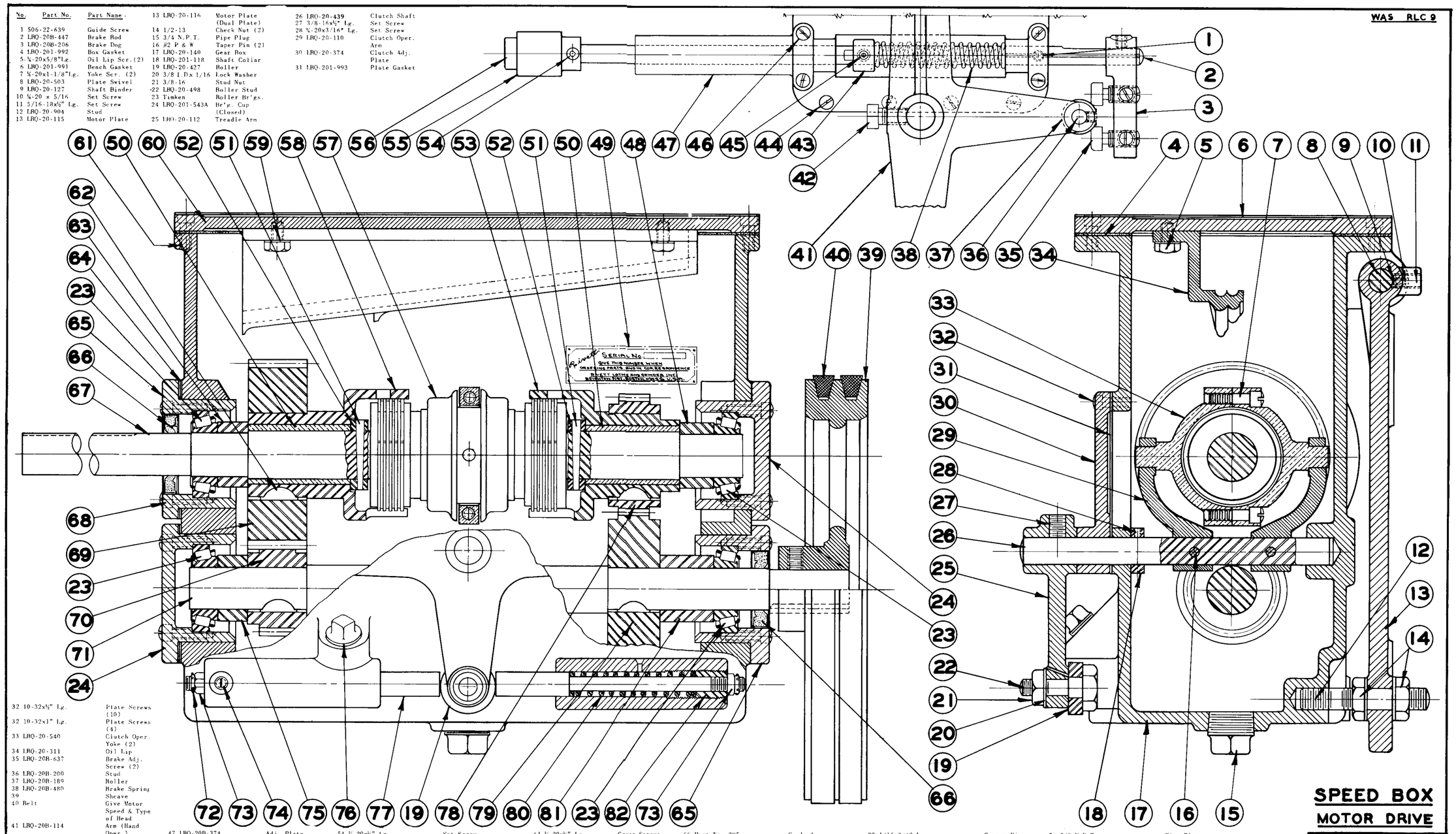

32	10-32x½" Lg.	Plate Screws (10)																					
32	10-32x1" Lg.	Plate Screws (4)																					
33	LRQ-20-540	Clutch Oper. Yoke (2)																					
34	LRQ-20-311	Oil Lip																					
35	LRQ-20B-637	Brake Adj. Screw (2)																					
36	LRQ-20B-200	Stud																					
37	LRQ-20B-189	Roller																					
38	LRQ-20B-480	Brake Spring																					
39		Sheave																					
40	Belt	Give Motor Speed & Type of Head																					
41	LRQ-20B-114	Arm (Hand Oper.)	47	LRQ-20B-374	Adj. Plate	54	¼-20x½" Lg.	Set Screw	61	¼-20x½" Lg.	Cover Screws	66	Part No. 295	Garlock	72	1/16x3/4" Lg.	Cotter Pin	76	3/8 N.P.T.	Pipe Plug
42	3/8-16x½" Lg.	Lock Screw	48	LRQ-201-530	Ret. Washer	55	LRQ-20B-274	Socket	62	#9 Hi-Pro	Gear Clutch			Klozurr	73	5/16-24	Castellated	77	LRQ-20-655	Plunger
43	LRQ-20B-188	Collar	49	LRQ-20-378	Serial No.	56	3/4 dia. x 1¼" Lg.	Cork Cushion			Keys	67	LRQ-201-449	Clutch Shaft			Nut (2)	78	LRQ-201-231	40 T Gear
44	#10-32x½" Lg.	Adj. Screw (10)	50	LRQ-20-155	Plate	57	#2 Pullmore	Clutch	63	LRQ-201-528	Ret. Washer	68	¼-20x3/4" Lg.	Cup Screw (16)	74	¼-20x3/8" Lg.	Set Screw (2)	79	LRQ-201-230	30 T Gear
45	¼-20x3/16" Lg.	Set Screw	51	#2 P & W	Cup Bushing	58	LRQ-201-546	Driving Cup	64	LRQ-201-817	Br'g. Adj. Shims	69	LRQ-201-233	48 T Gear	74	103-10-511	Set Screw	80	LRQ-20-666	Spring (2)
46	#10-32x1" Lg.	Adj. Screw (4)	52	LRQ-201-192	Taper Pin	59	¼ I.D.	Lock Washer (2)	65	LRQ-201-544A	Br'g. Cup (Open)	70	LRQ-201-232	22 T Gear			Tip	81	LRQ-201-529	Ret. Washer
			53	LRQ-201-547	Collar							71	LRQ-201-447	Lower Shaft	75	LRQ-201-527	Ret. Washer	82	LRQ-20-637	Adj. Screw
					Driving Cup	60	LRQ-20-375	Cover Plate												

SPEED BOX
MOTOR DRIVE

RIVETT LATHE & GRINDER INC.
BOSTON, MASS.
Drawn by ..... Date .....
Traced by ..... Date .....
Checked by ..... Date .....

LRQ-201

INSTRUCTIONS FOR SPEED-BOX BRAKE ADJUSTMENT

THE FRICTION DISC CONTACTS A POLISHED ANNULAR SURFACE (A) OF THE CONE PULLEY BY ACTION OF COIL SPRING (G), AUTOMATICALLY RELEASED WHEN EITHER HIGH OF LOW SIDE OF THE CLUCH IS ENGAGED FOR DRIVING.

TO REPLACE BRAKING DISC (B) LOOSEN SOCKET SET SCREW (D) AND DRAW BACK ROD (H) AGAINST COMPRESSED SPRING (C) SLIP OFF SOCKET AND INSERT NEW DISC.

FOR GREATER BREAKING POWER LOOSEN SOCKET SET SCREW (E) AND SLIP COLLAR (F) SLIGHTLY TO THE RIGHT, FURTHER COMPRESSING COILED SPRING (G), TIGHTEN SET SCREW (E).

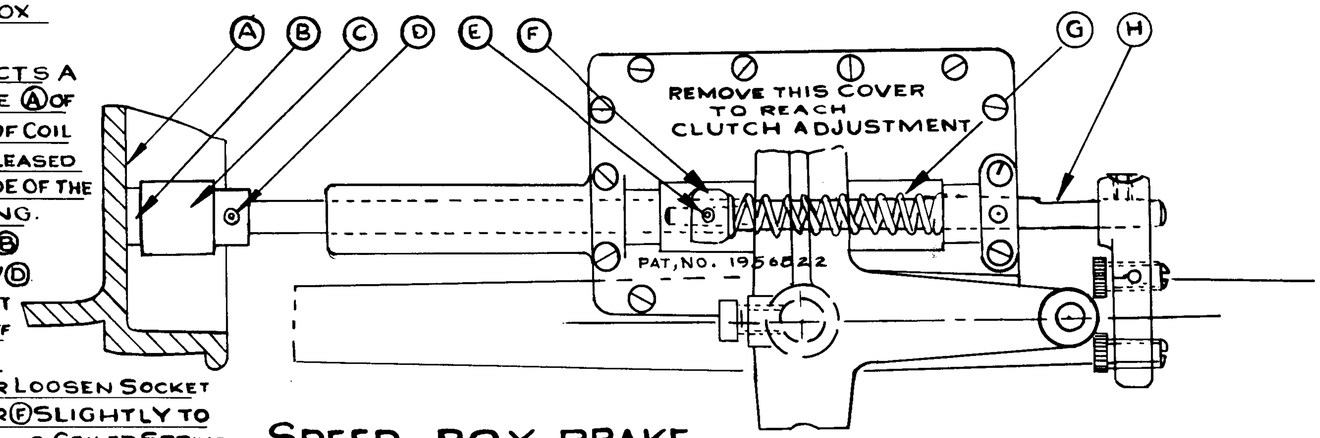

SPEED-BOX BRAKE

DISC CLUTCH

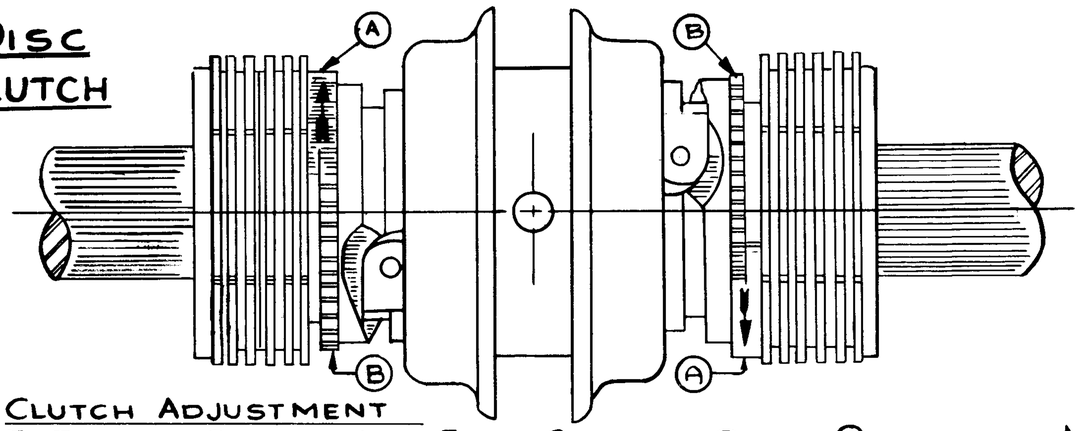

CLUTCH ADJUSTMENT

TO TAKE UP CLUTCH-LIFT FLAT CIRCULAR SPRING (A) AND MOVE COLLAR (B) IN DIRECTION OF THE ARROW.

TO LOOSEN CLUTCH-MOVE IN THE OPPOSITE DIRECTION

USE RIVETT SPECIAL-BOX OIL

HAND LEVER ADJUSTMENTS

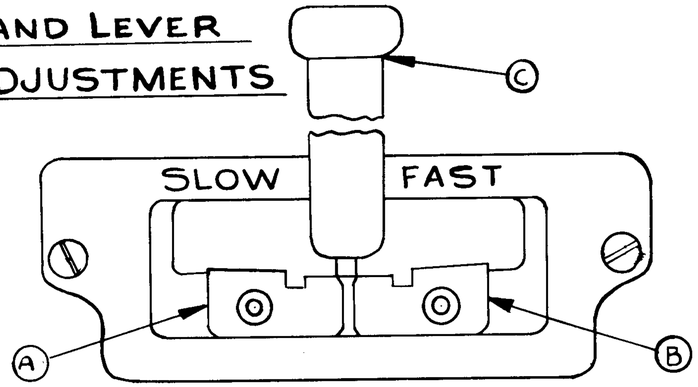

AFTER CHANGING CLUTCH ADJUSTMENT MOVE BLOCKS (A) AND (B) TO CONTROL THROW OF LEVER (C), THIS IS TO GIVE AMPLE DRIVING POWER WHEN CLUTCH IS ENGAGED BUT TO LIMIT MOVEMENT TO PREVENT CLUTCH FROM "GRABBING."

SYM	REVISION	DATE	BY

MATERIAL:

MATERIAL SIZE:
PATT. NO.:
DIE NO.:

WEIGHT ROUGH:—
WEIGHT FINISHED:—

ASSEMBLY NO.
NO. REQ. PER ASSEM.

SURFACE TREATMENT:

HEAT TREATMENT:

TOOLS:

RIVETT LATHE & GRINDER, INC.
BRIGHTON. BOSTON. MASS.. U.S.A.

TOLERANCES UNLESS OTHERWISE SPECIFIED:—
DECIMALS: FRACTIONS: ANGLES:
CONCENTRICITY:
FACE RUNOUT:
MACH. SURFACES:
BREAK SHARP CORNERS — REMOVE ALL BURRS
ENG. APPVD. — MFG. APPVD.
DRAWN BY: — CHECKED BY:
TRACED BY: PK — SCALE:
DWG. NO.

PRINTED BY SPAULDING-MOSS CO. BOSTON MASS.

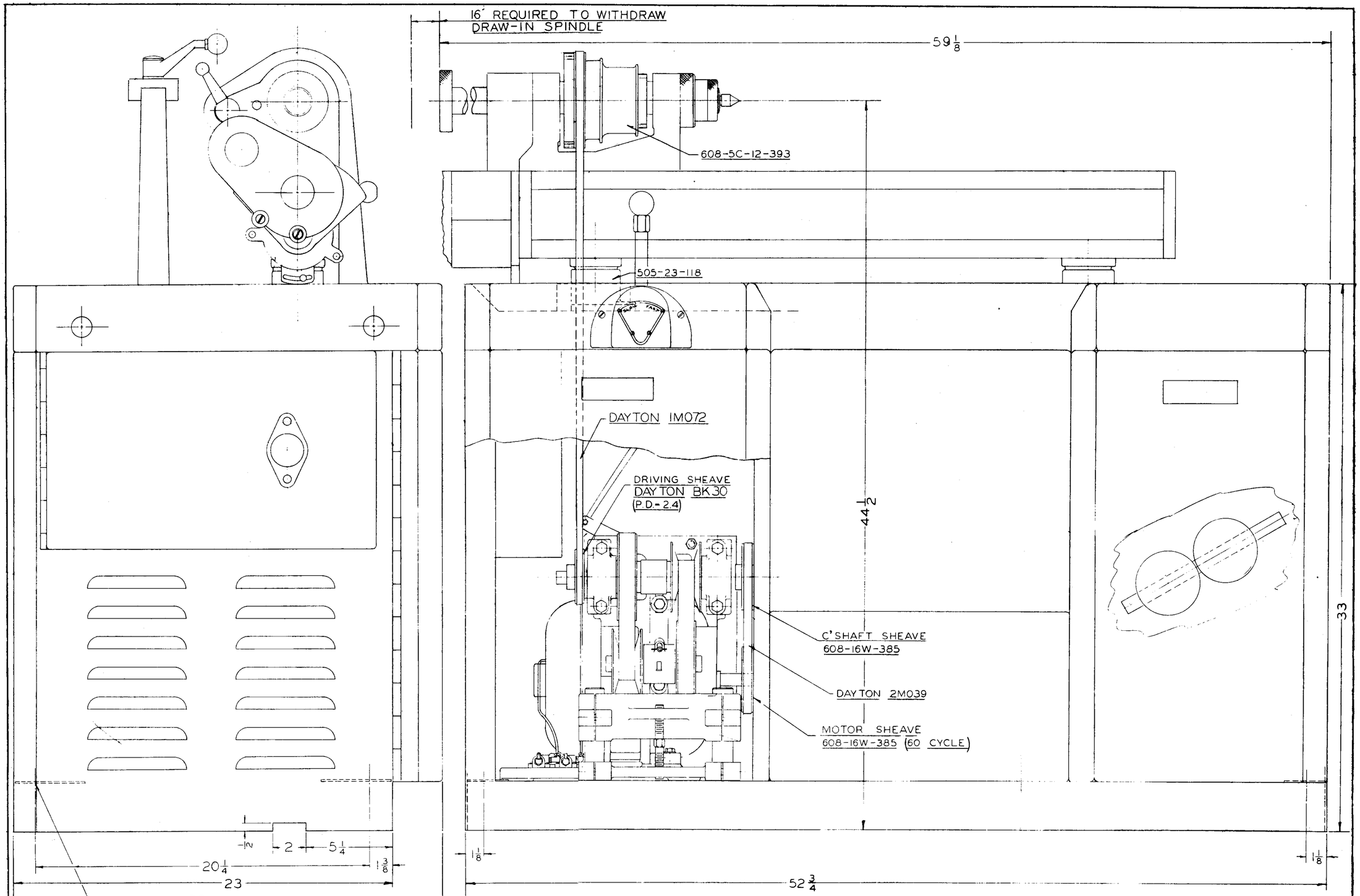

608-PV5C LATHE
WORTHINGTON DRIVE
KNEE HOLE CABINET

SYM	REVISION	DATE	BY
MATERIAL:			
MATERIAL SIZE:			
PATT. NO.:			
DIE NO.:			
WEIGHT ROUGH:-			
WEIGHT FINISHED:-			
ASSEMBLY NO.			
NO. REQ. PER ASSEM.			

SURFACE TREATMENT:

HEAT TREATMENT:

TOOLS:

RIVETT LATHE & GRINDER, INC.
BRIGHTON, BOSTON, MASS., U.S.A.

FLOOR PLAN

TOLERANCES UNLESS OTHERWISE SPECIFIED:-
DECIMALS: FRACTIONS: ANGLES:
CONCENTRICITY:
FACE RUNOUT:
MACH. SURFACES:
BREAK SHARP CORNERS: MAX. RADIUS
REMOVE ALL BURRS
DRAWN BY: E.T.G. 1-22-48 CHECKED BY:
TRACED BY: SCALE: 1/8 = 1'-0"
DWG. NO.
608-10W

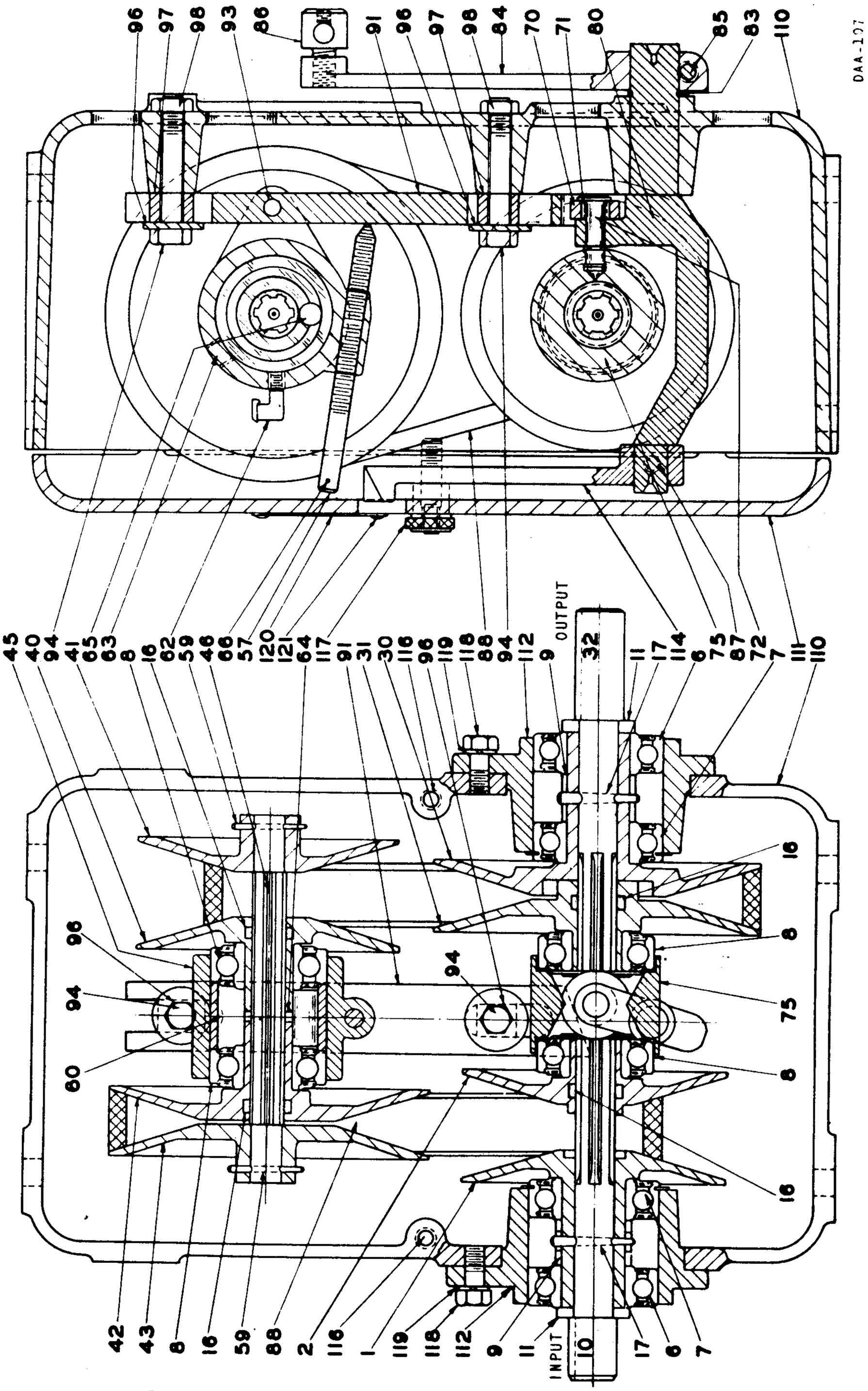

ALLSPEED DRIVE - MODEL A
GENERAL ASSEMBLY FOR PARTS LIST

MODEL "A" ALLSPEED DRIVE PARTS

INDUSTRIAL CONSUMER NET PRICE SECTION

Part No.		Input Shaft Assembly Parts		No. Req.	Each
1	-	First Driver Stationary Flange	-	1	
2	-	First Driver Shiftable Flange	-	1	
6	-	Ball Bearing	-	1	
7	-	Ball Bearing with Snap Ring	-	1	
8	-	Ball Bearing	-	1	
9	-	Bearing Spacer	-	1	
10	-	Input Shaft with Collar (11)	-	1	
16	-	Felt Strip	-	1	
17	-	Taper Pin	-	1	

Part No.		Output Shaft Assembly Parts		No. Req.	Each
6	-	Ball Bearing	-	1	
7	-	Ball Bearing with Snap Ring	-	1	
8	-	Ball Bearing	-	1	
9	-	Bearing Spacer	-	1	
16	-	Felt Strip	-	1	
17	-	Taper Pin	-	1	
30	-	Second Driven Stationary Flange	-	1	
31	-	Second Driven Shiftable Flange	-	1	
32	-	Output Shaft with Collar (11)	-	1	

Part No.		Jackshaft Assembly Parts		No. Req.	Each
8	-	Ball Bearing	-	2	
16	-	Felt Strip	-	2	
40	-	Second Driver Stationary Flange	-	1	
41	-	Second Driver Shiftable Flange	-	1	
42	-	First Driven Stationary Flange	-	1	
43	-	First Driven Shiftable Flange	-	1	
45	-	Jackshaft Housing	-	1	
46	-	Jackshaft	-	1	
57	-	Belt Tension Adjusting Screw	-	1	
59	-	Taper Pin	-	2	
60	-	Bearing Spacer	-	1	
62	-	Oil Cup	-	1	
63	-	Set Screw	-	1	
64	-	Felt Washer	-	1	
65	-	Felt Roller	-	1	
66	-	Groov-Pin	-	1	
91	-	Cam Bar	-	1	
93	-	Jackshaft Housing Pin	-	1	

Part No.		Control Yoke Assembly Parts		No. Req.	Each
70	-	Cam Roller	-	1	
71	-	Cam Roller Bearing	-	1	
72	-	Control Yoke Shoulder Pin	-	1	
80	-	Control Yoke	-	1	
83	-	Snap Ring	-	1	

Part No.		Housing Assembly Parts		No. Req.	Each
75	-	Shifting Spacer	-	1	
84	-	Control Lever with Bolt and Nut	-	1	
86	-	Control Lever Swivel with Set Screw	-	1	
94	-	Cap Screw	-	2	
96	-	Cam Bar Guide Washer	-	2	
97	-	Cam Bar Guide Block	-	2	
98	-	Jam Nut	-	2	
110	-	Housing	-	1	
111	-	Housing Cover	-	1	
112	-	Bearing Sleeve	-	2	
114	-	Pointer with Set Screw (87)	-	1	
116	-	Stud	-	2	
117	-	Locking Knob	-	2	
118	-	Cap Screw	-	6	
119	-	Lockwasher	-	6	
120	-	Nameplate	-	1	
121	-	Drive Screw	-	4	

Minimum charge per invoice **$3.00** net. All shipments are F.O.B., Oil City, Pa. Prices subject to Published Discount Schedule. When ordering, give serial number of Drive.

TAXES: The Purchaser shall pay to the Vendor, in addition to the purchase price, the amount of all Sales, Use, Privilege, Occupation, Excise, or other similar taxes, Federal, State or Local, which the Vendor is required to pay in connection with furnishing the said goods to the Purchaser.